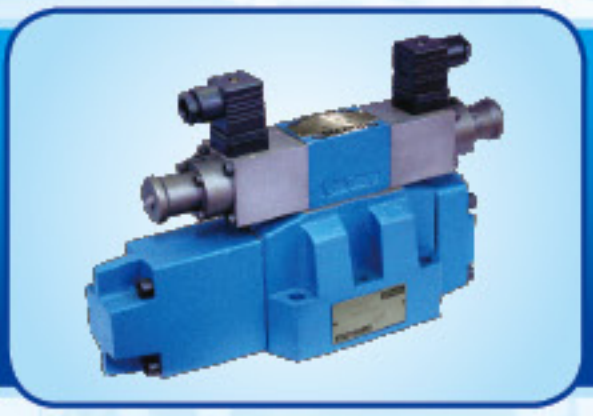

Huade

Hydraulic valves

Proportional Valves
Proportional Amplifiers

Catalogue

BEIJING HUADE HYDRAULIC INDUSTRIAL GROUP CO.,LTD.

BEIJING HUADE HYDRAULIC INDUSTRIAL GROUP CO.,LTD.	Proportional Directional Valves pilot operated type 4WRZ, external pilot operated type 4WRH			RC29110/9.2006
	Size 10 to 32	up to 35 MPa	up to 1600 L/min	Replaces: RC29110/08.2000

Features:

- Pilot (WRZ) and direction (WRH) proportional valve
- For subplate mounting
- For the control of both direction and flow rate of a hydranlic fluid
- Spring centred ,no spool drift
- Low pressure drop across control lands
- Valve and electronic control from one source
- Proportional solenoid operation
- Porting pattern to DIN 24 340 form A,ISO4401 and CETOP-RP121H.

Function,section

Valve types 4WRZ... are 4- way valves operated by means of proportional solenoids.They control the direction and flow rate of hydraulic fluid.

They basicly consist of the pilot valve (3) ,the main valve (7) with the main spool (8),and the centering spring (9).

If solenoid "B" is energised, pilot spool (4) is moved to the right.Pilot oil is then either fed internally from port P,or "externally" from port X via the pilot valve (3) into the pressure chamber (10) and moves the main spool (8) a distance proportional to the strength of the electrical current.The throttling grooves in the main spool open progressively with increasing current, thus controlling the flow of hydraulic fluid to the actuator ports.

When the electrical singal is switched off, both the pilot spool (4) ,and the main spool (8) return to neutral independent of the control pressure supply.An energency hand operator permits movement of the pilot spool position without energising the solenoids.

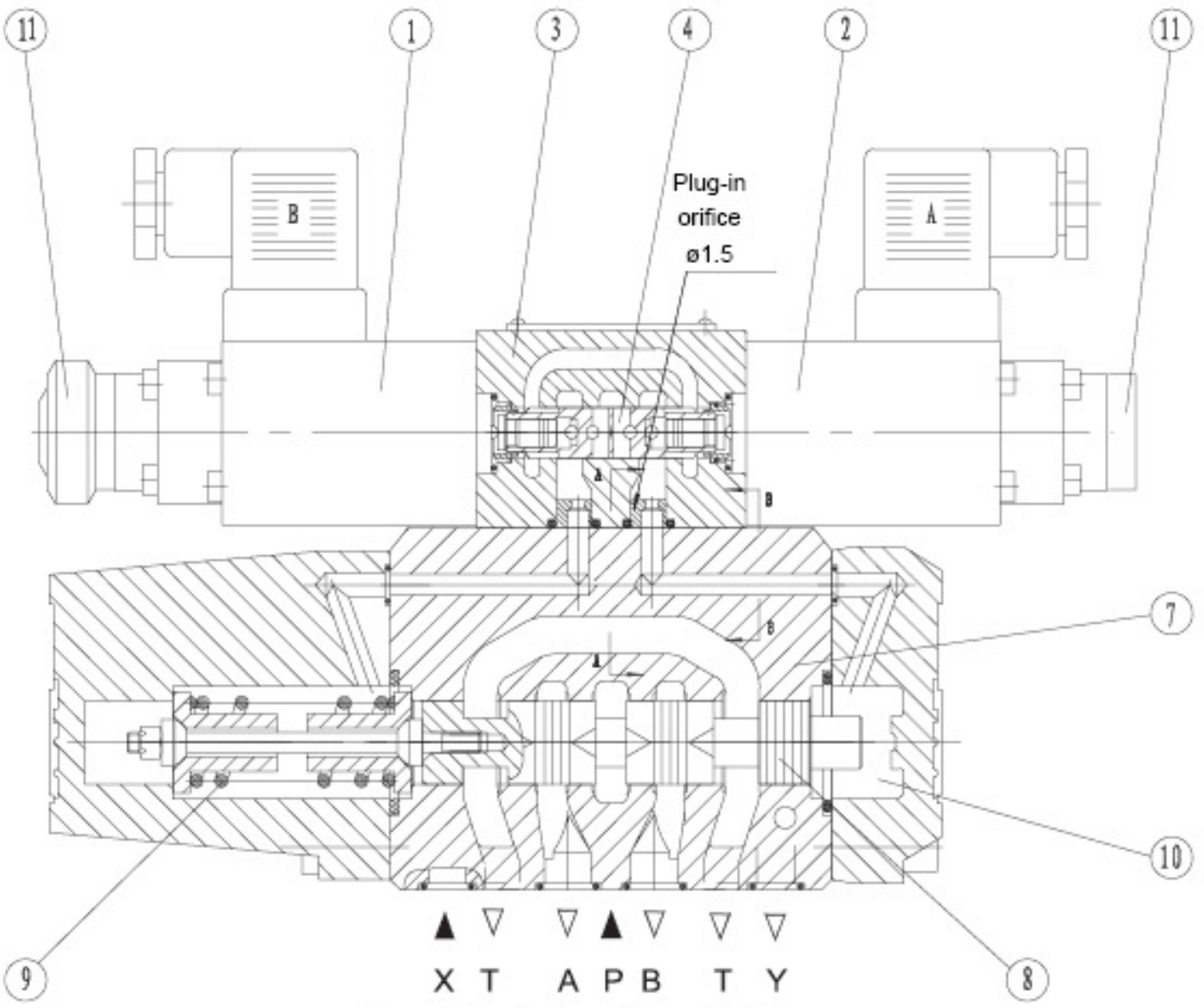

Proportional valve of type 4WRZ

Type 4WRH:

The type 4WRH valves are pilot operated proportional directional valves for external operation via pressure control valves.The function and principle is the same as that for valve type 4WRA.The inter-connecting plate (12) connects the pilot connection A with connection T(Y) and pilot connection B with P(X).The pilot pressure at the main valve must be from 0.4 MPa to 2.5 MPa,so flow is either from P to A and B to T or P to B and A to T.

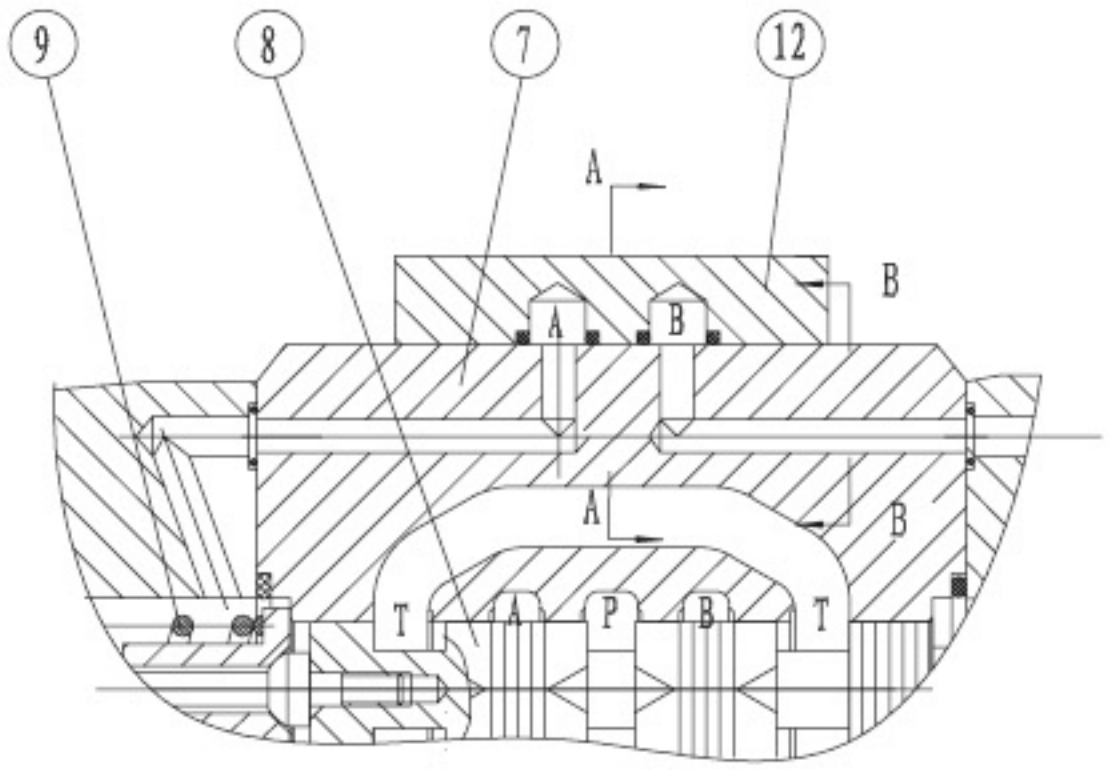

proportional valve of type 4WRH

Pilot valve:

The pilot valve is a proportional solenoid operated 3-way pressure reducing valve(type 3DREP6).Throttle insert are installated in port A and B,further detils see the text of 3DREP6.

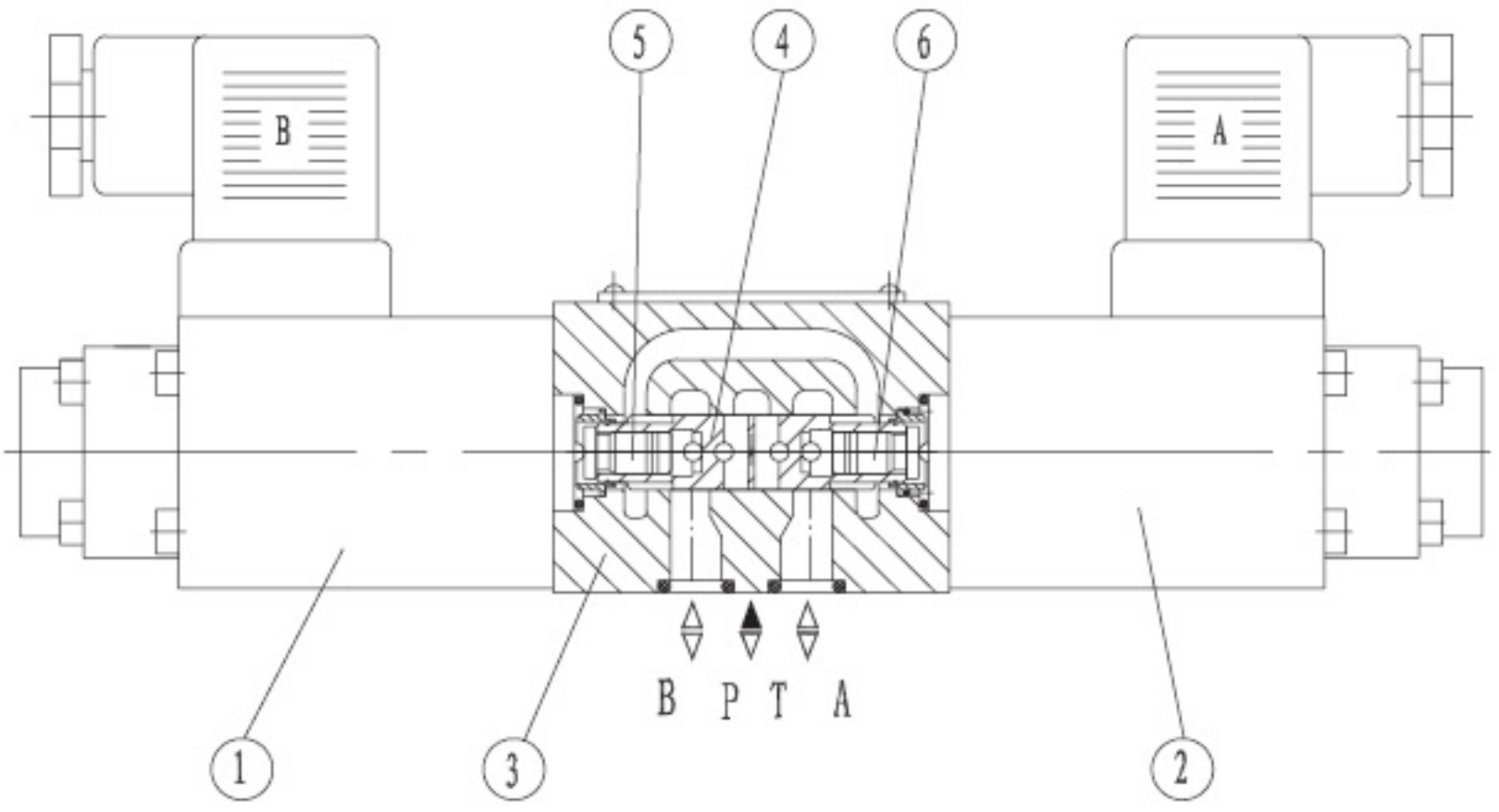

Pilot valve type 3DREP6

Pilot Oil Supply

1、 Pilot oil feed , external ; drain , external。
On this model,the pilot oil feed via the port "X" , return is not directed into the T-port of main valve, but is led separately via port Y to tank(externaily)
13 Plug M6

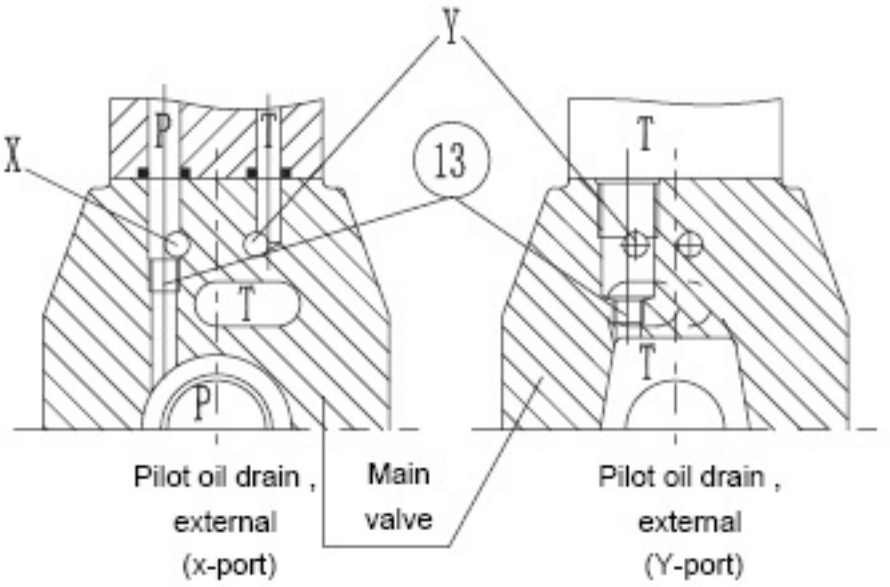

chart for feed external and drain external

2、 Pilot oil feed , internal ; drain , external。
On this model,the pilot oil inlet is supplied from the P-port of the main valve(internaliy).The polit oil return is not directed into the T-port of main valve, but is led separately via port Y to tank(externaily)
13 Plug M6

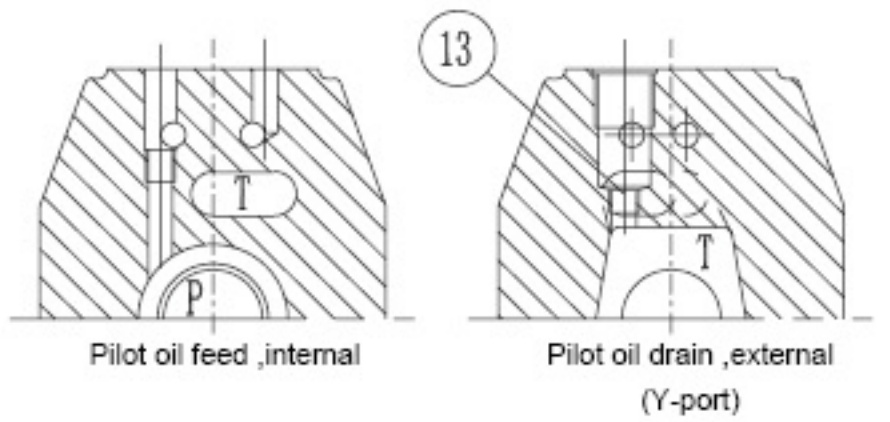

chart for feed internal and drain external

3、 Pilot oil feed , internal ; drain , internal。
On this model,the pilot oil inlet is supplied from the P-port of the main valve(internaliy).The polit oil return is taken directly into the T-port of the main valve (internaliy).Ports "X" and "Y" in the subplate are both plugged.

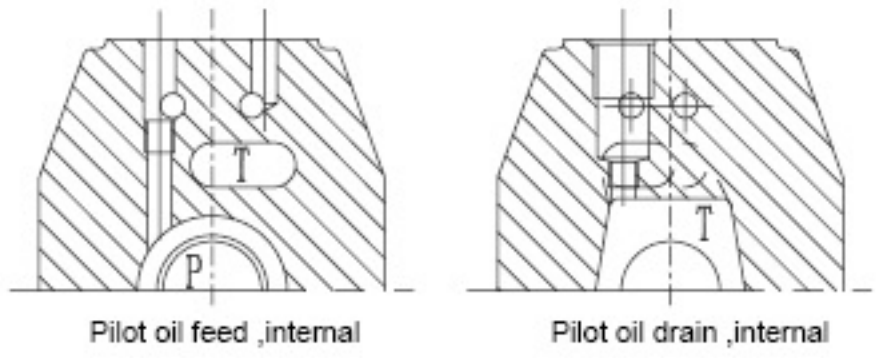

chart for feed internal and drain internal

4、 Pilot oil feed , external ; drain , internal。
On this model,the pilot oil inlet is feed from port "X", The polit oil return is taken directly into the T-port of the main valve (internaliy).Port "Y" in the subplate is plugged.
13 Plug M6

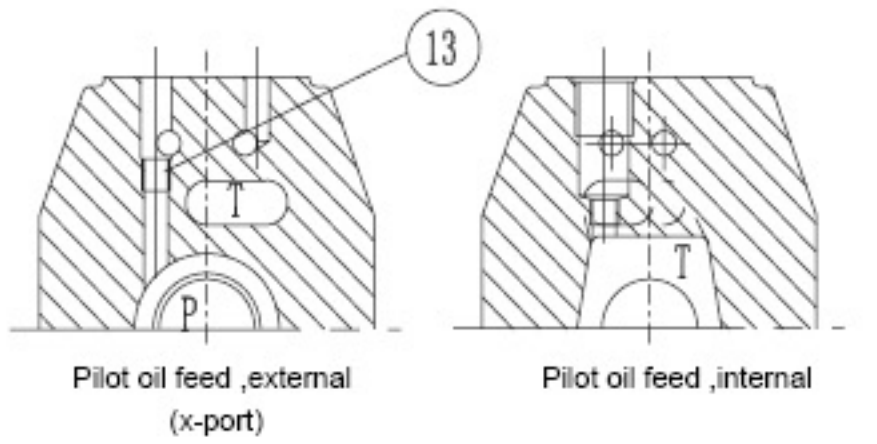

chart for feed externd and drain internal

Symbols(simplified)

Type 4WRZ...30B/...

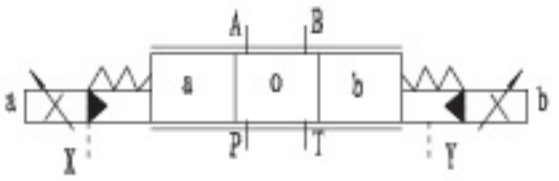

X=external
Y=external

Type 4WRZ...A...30B/

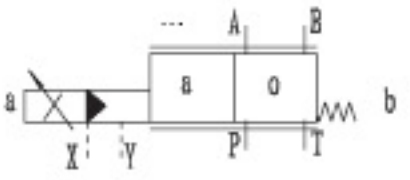

Type 4WRZ...B...30B/

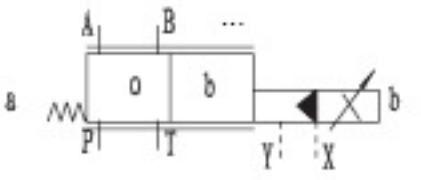

Type 4WRZ...30B/...E..

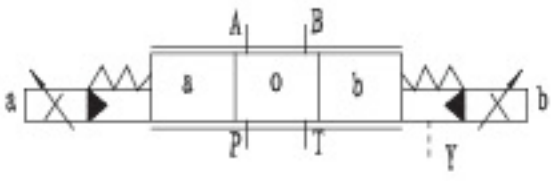

X=intemal
Y=external

Type 4WRZ...A...30B/...E...

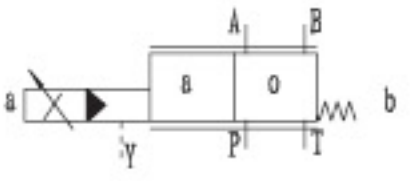

Type 4WRZ...B...30B/...E...

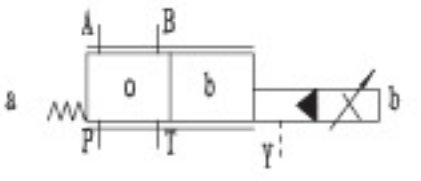

Type 4WRZ...30B/...ET...

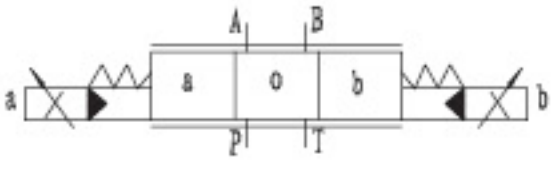

X=intemal
Y=intemal

Type 4WRZ...A...30B/...ET...

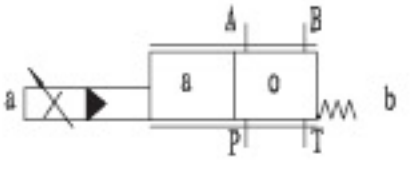

Type 4WRZ...B...30B/...ET...

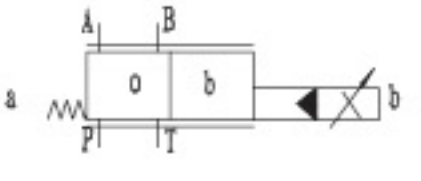

Type 4WRZ...30B/...T...

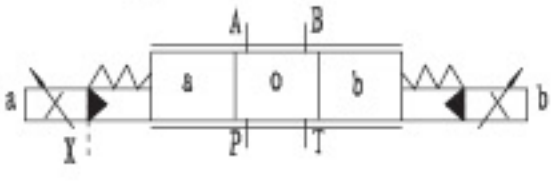

X=external
Y=intemal

Type 4 WRZ...A...30B/...T...

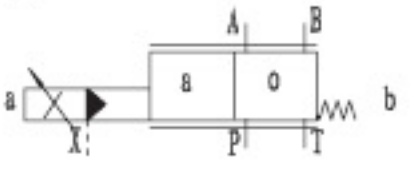

Type 4WRZ...B...30B/...T...

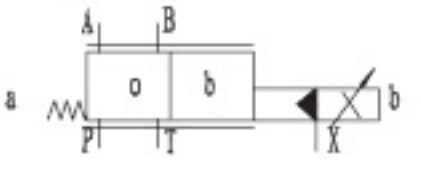

Type 4WRH...30B/...

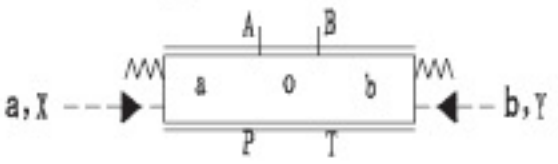

X=external
Y=external

Type 4WRH...A...30B/...

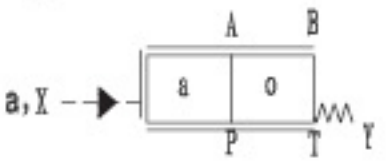

Type 4WRH...B...30B/...

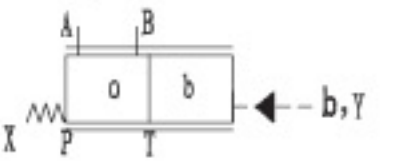

Symbols(detailed):

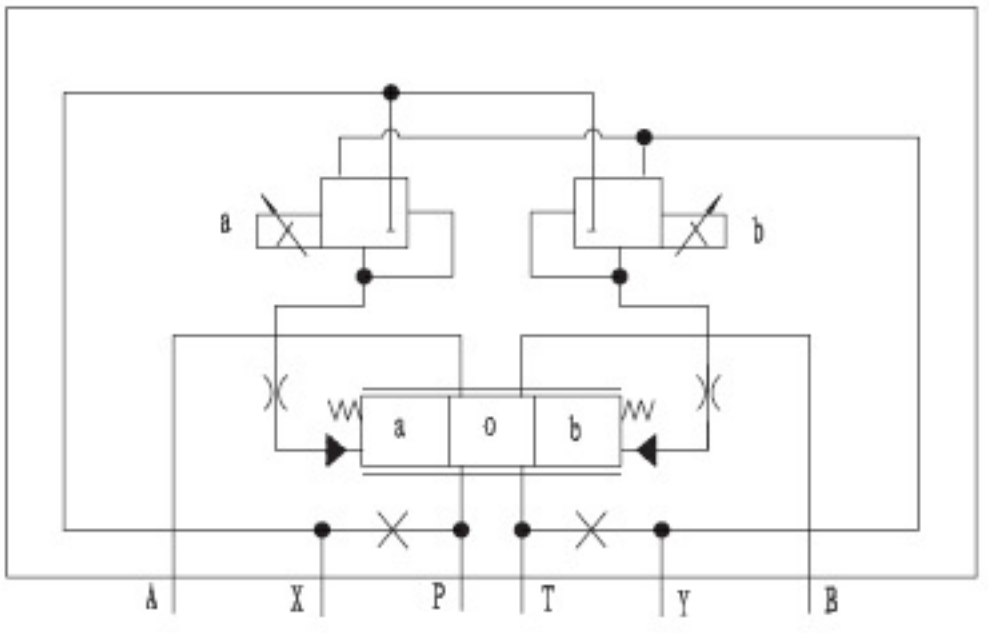

Example: 4WRZ...
Polit oil feed,external
polit oil drain,external

Electrical Connection:

Coil connections

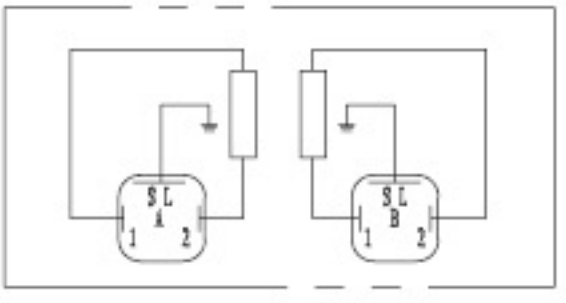

Plug connections

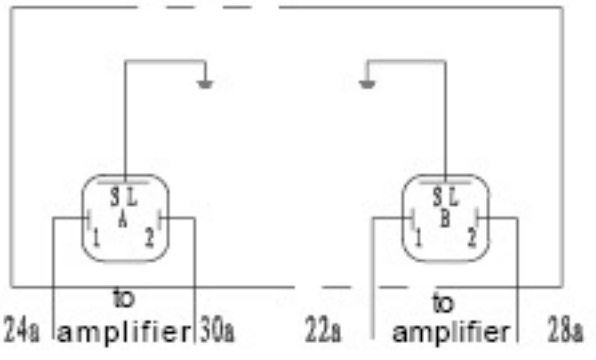

Ordering code

4WR				30	B									*

Hydraulic operation =H
Electro-hydraulic operation =Z

size		
	10	=10
	16	=16
	25	=25
	32	=32

Spools

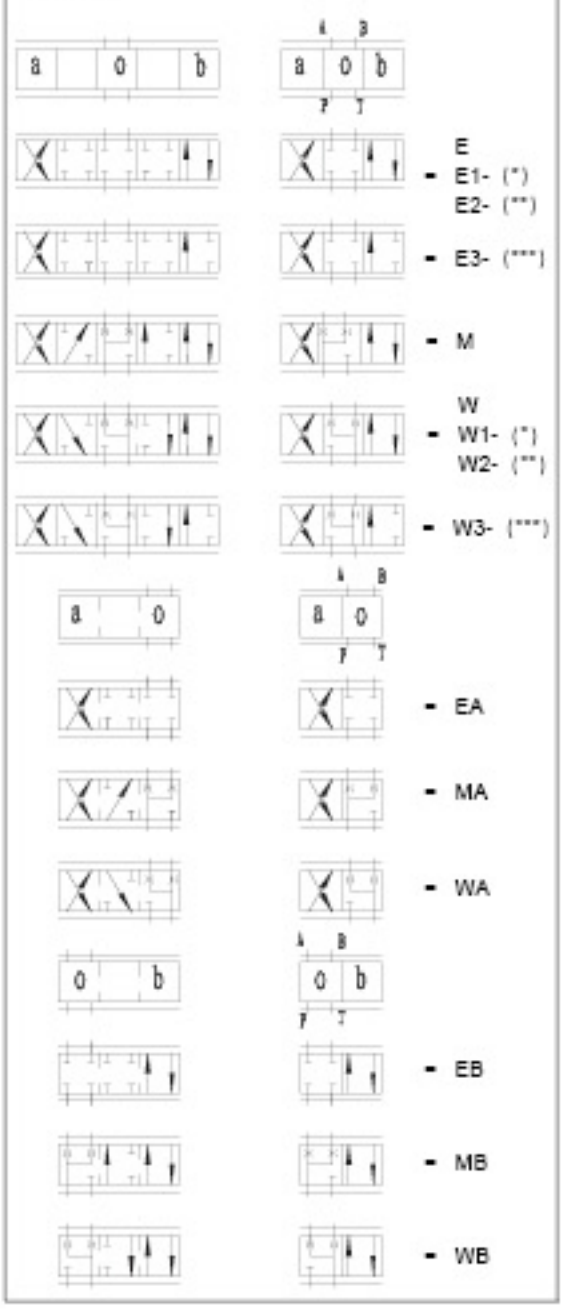

Further details in clear text

M= mineral oils
V= phosphate ester

no code= without press.reducing valve
D 2= with press.reducing valve
ZDR6DP2-30/75 YM(not for 4WRH or 4WRZ without pilot valve)

Z4=Pulg-in connector (not for 4WRH or 4WRZ without pilot or type J)

No code = Pilot oil supply external, drain external
E= Pilot oil supply internal, drain external
ET = Pilot oil supply internal, drain interna
T= Pilot oil supply external, drain internal
(type 4WRH without E,ET,T)

No code = Without special protection
J = Sea water resistant

No code = Without hand override
N = With hand override
(not for 4WRH or 4WRZ without pilot valve)

24 = 24V DC (standard version)
(not for 4WRH or 4WRZ without pilot valve)

6A= Pilot control valve size 6
(not for 4WRH or 4WRZ without pilot valve)

B=Technology of Beijing Huade Hydraulic

30=Series 30 (30 to 39 unchanged installation and connection dimensions)

Nominal flow at 1MPa pressure drop accross valve		
Size 10	25 L/min	=25
	50 L/min	=50
	85 L/min	=85
E1、E2、E3、W1、W2、W3 only 85L/min		
Size 16	100 L/min	=100
	150 L/min	=150
E1、E2、E3、W1、W2、W3 Only 150L/min		
Size 25	270 L/min	=270
	325 L/min	=325
E1、E2、E3、W1、W2、W3 only 325L/min		
Size 32	360 L/min	=360
	520 L/min	=520
E1、E2、E3、W1、W2、W3 only 520L/min		

(*) For spool symbol E1 and W1:

$P \rightarrow A=Qmax \quad B \rightarrow T=\frac{Q}{2}$

$P \rightarrow B=\frac{Q}{2} \quad A \rightarrow T=Q_{max}$

(**)For spool symbol E2 and W2:

$P \rightarrow A=\frac{Q}{2} \quad B \rightarrow T=Q_{max}$

$p \rightarrow B=Q_{max} \quad A \rightarrow T=\frac{Q}{2}$

(***) For spool symbol E3 and W3:

$P \rightarrow A=Q_{max} \quad B \rightarrow T=Blocked$

$P \rightarrow B/A \rightarrow T=Q_{max}$

(For regenerative control,connect full of cylinder to port A)

Technical data

Hydraulic data

size		10	16	25	32
pilot valve pressure (MPa)	external pilot oil supply	3 to 10			
	internal pilot oil supply	Up to 10 (over 10 must installate ZDR6DP$_2$-30B/75YM)			
Main valve pressure (MPa)		31.5	35		
Return pressure (MPa)	port T(external pilot oil return)	31.5	25		15
	port T(internal pilot oil return)	3			
	port Y	3			
Pilot oil volume (cm^3) or spool movement 0~100%		1.7	4.6	10	26.5
Pilot oil flow at port X or Y (L/min) for spool movement 0~100%		3.5	5.5	7	15.9
Flow throught main valve (L/min)		270	460	877	1600
Hysteresis (L/min)		6			
Repeatability (%)		3			
degree of contamination (μm)		⩽ 20			
Fluid		Mineral oil(for NBR seal),Phosphate ester (for FPM seal)			
Viscosity range (mm^2/s)		2.8 to 380			
Fluid temperature range (℃)		-20 to +70			
mounting position		optional			
Weight (Kg)	valve with one solenoid	7.4	12.7	17.5	41.8
	valve with two solenoids	7.8	13.4	18.2	42.2

Electrical data

Type of supply		DC
Norminal current of solenoid (A)		0.8
Coil resistance (Ω)		cold (at20℃) 19.5;max.valve,hot 28.8
Enviomment temperature (℃)		+50
Coil temperature (℃)		+150
Duty cycle		Continuous
Pilot current (A)		⩽ 0.02
Insulation		IP65
Associated amplifier	With 1 ramp time	VT-3000S30
	With 5 ramp times	VT-3006S30
Electrical connection		Plug connection

Valve Movement with Stepped Electrical Input Singal

Size 10

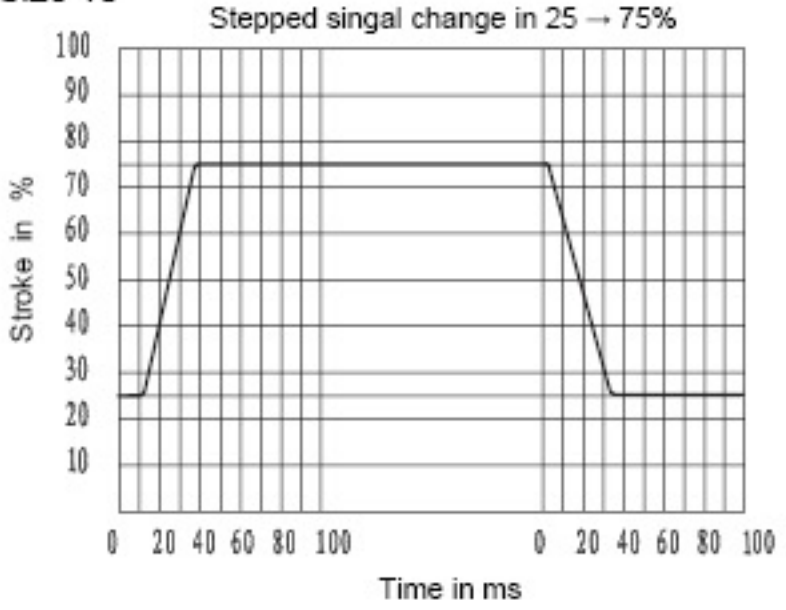

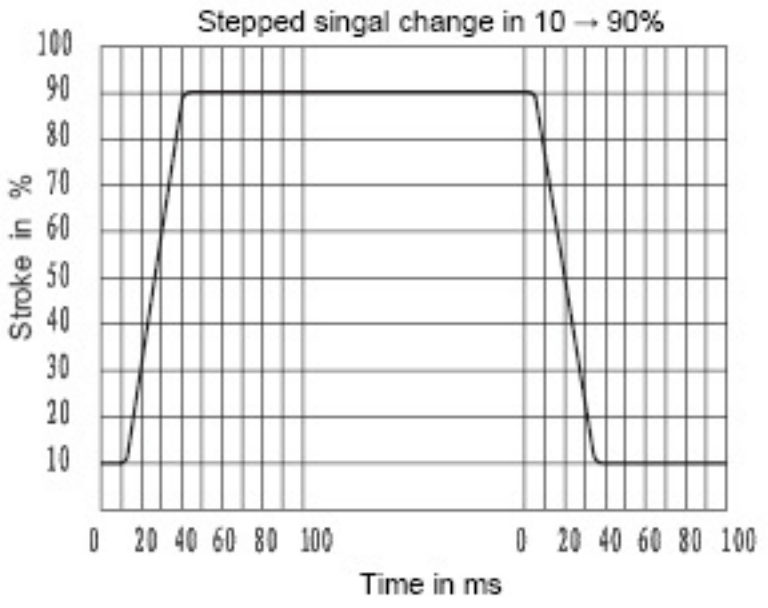

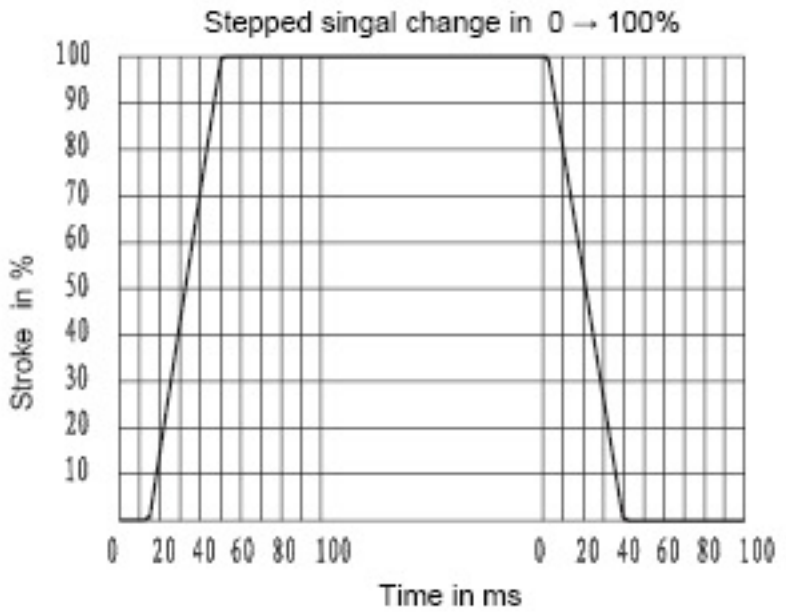

Pilot pressure at 5MPa

Size 16

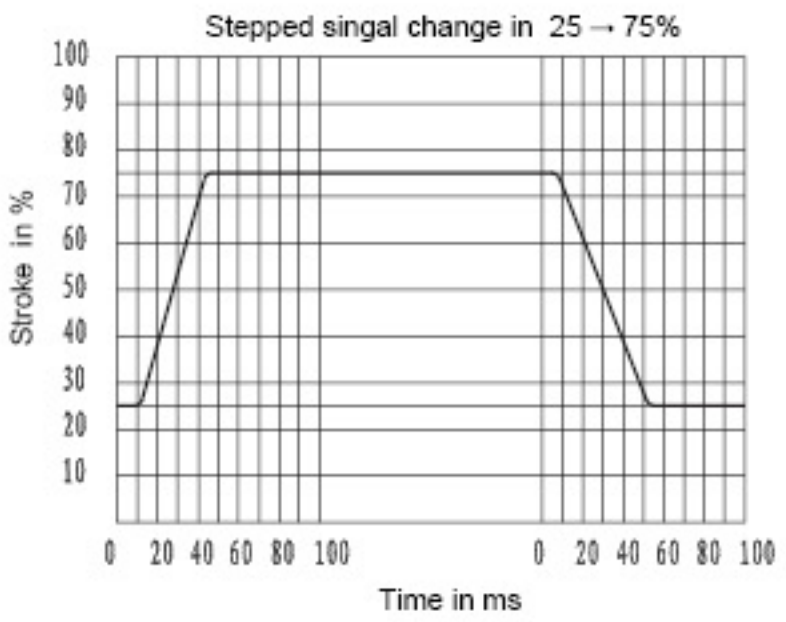

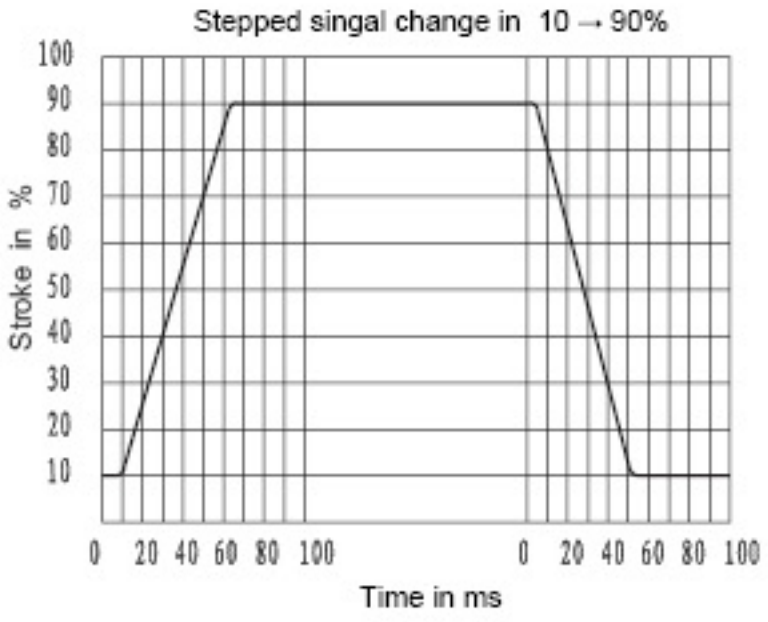

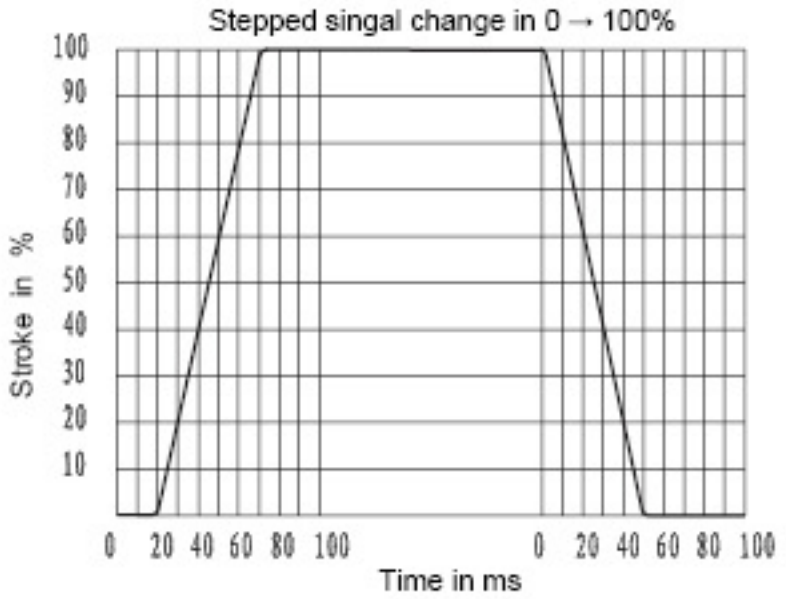

Pilot pressure at 5MPa

Size 25

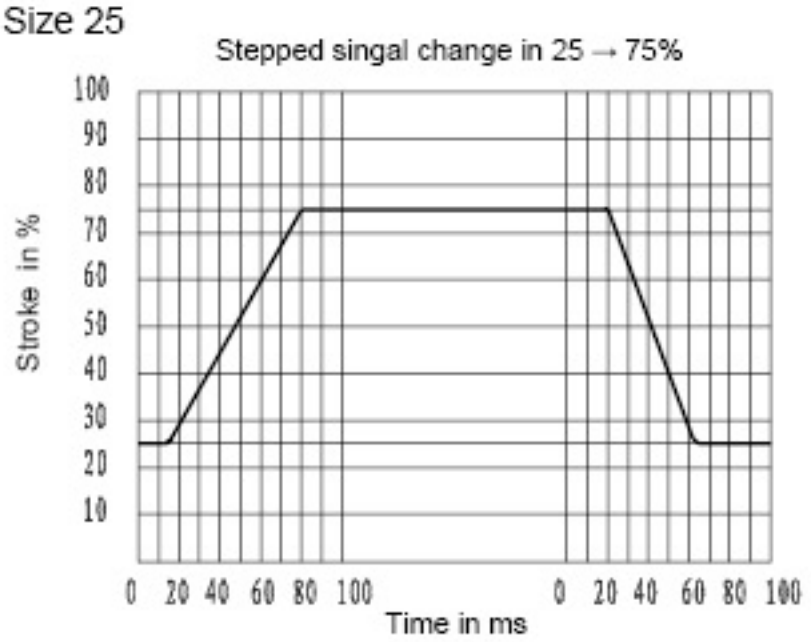

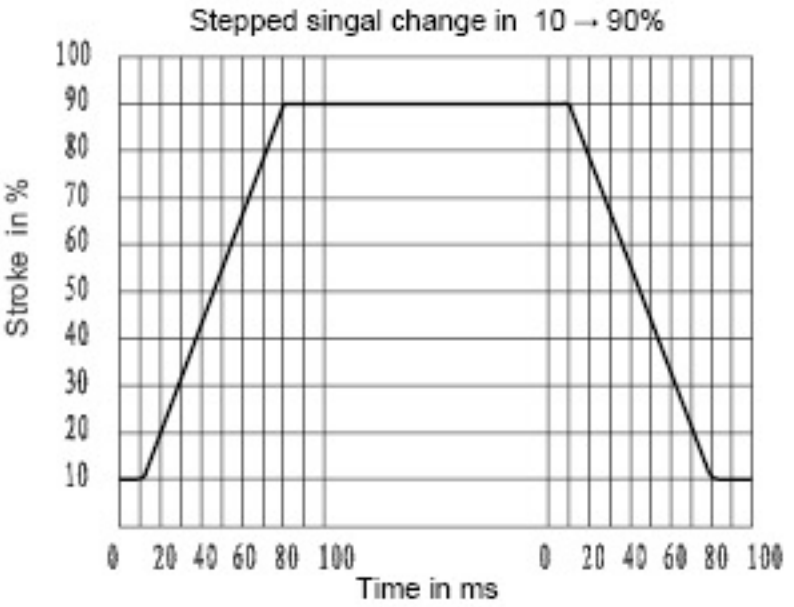

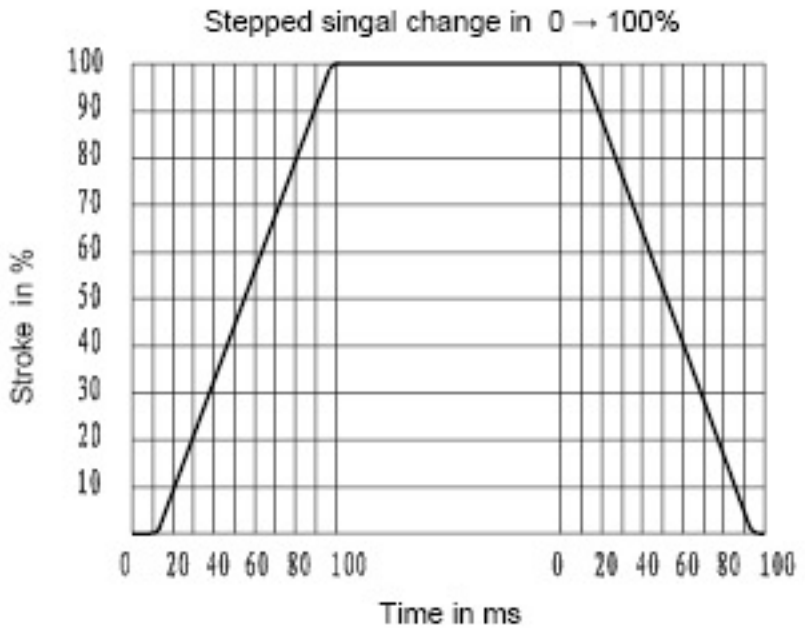

Pilot pressure at 5MPa

Size 32

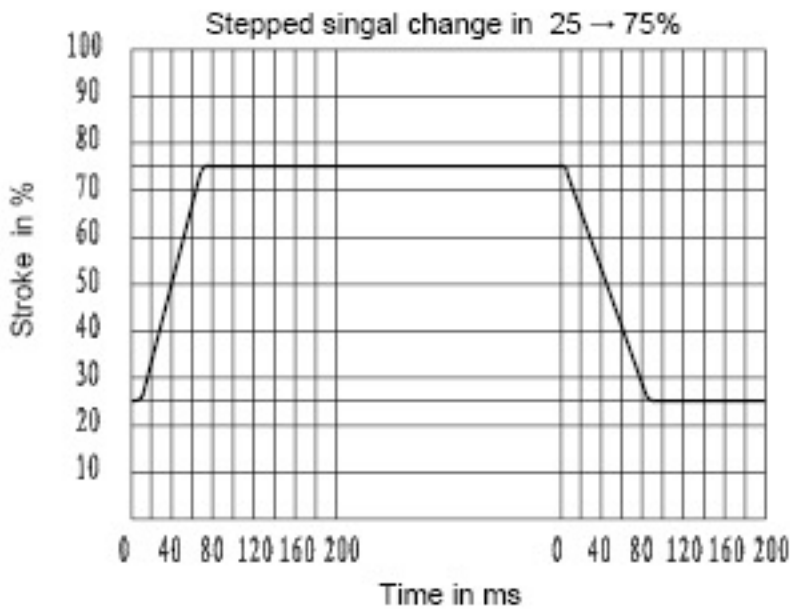

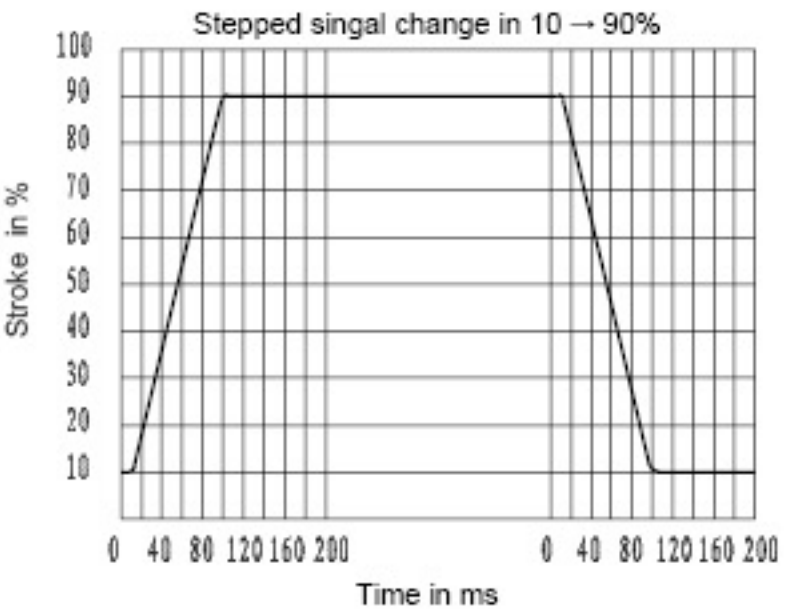

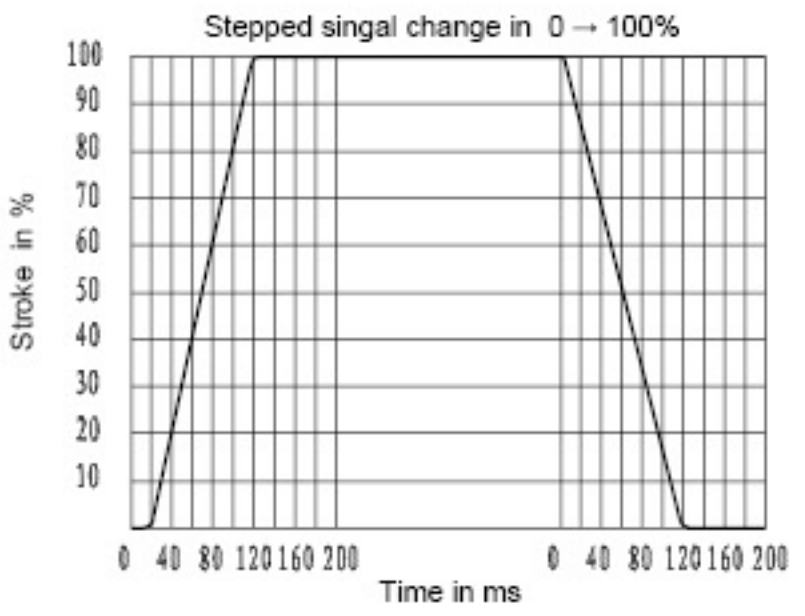

Pilot pressure at 5MPa

Characteristic curves:(measured at v=36 × $10^{-6}m^2/S$ t=50°C)

Size 10

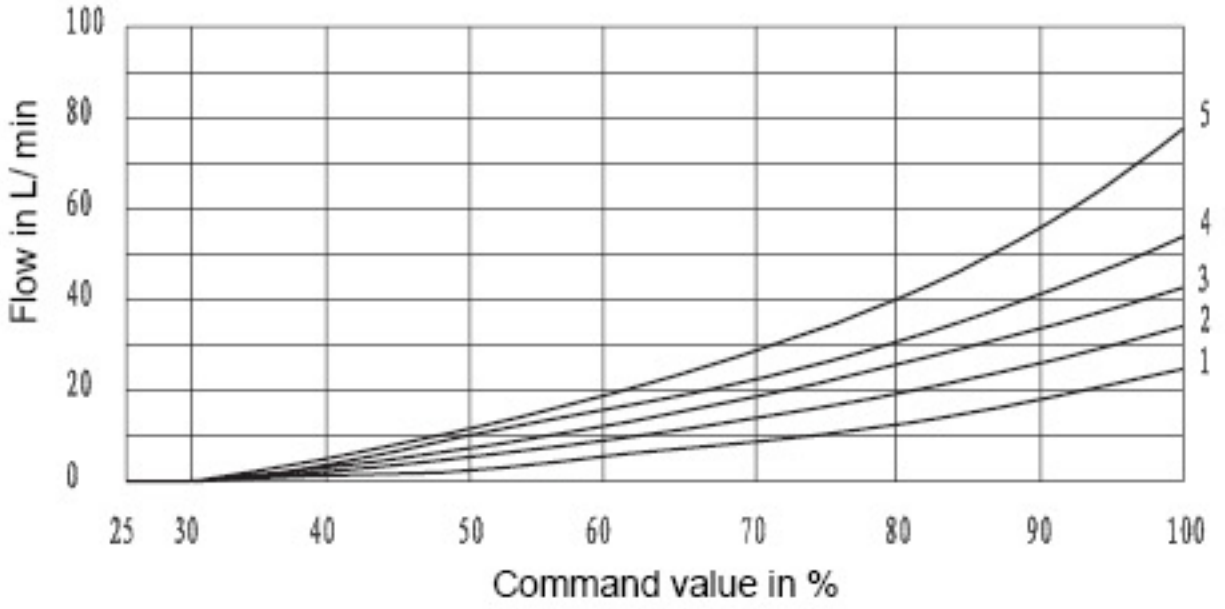

25L/min Nominal flow at 1MPa valve pressure difference
1 Pv = 1MPa constant
2 Pv = 2MPa constant
3 Pv = 3MPa constant
4 Pv = 5MPa constant
5 Pv = 10MPa constant

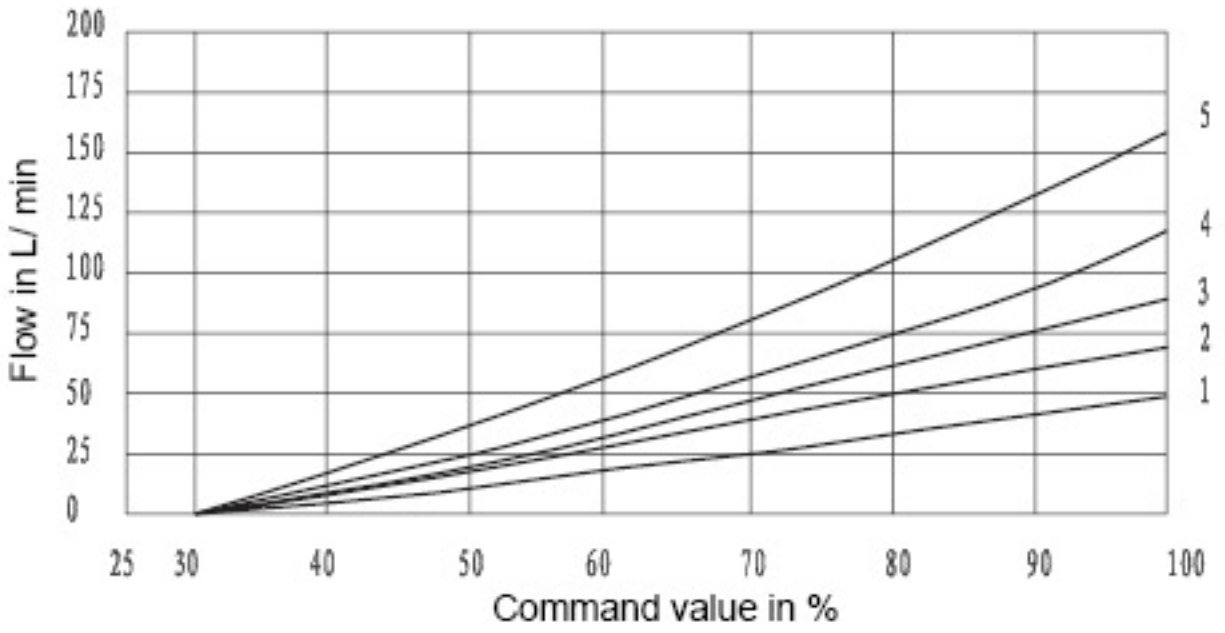

50L/min Nominal flow at 1MPa valve pressure difference
1 Pv = 1MPa constant
2 Pv = 2MPa constant
3 Pv = 3MPa constant
4 Pv = 5MPa constant
5 Pv = 10MPa constant

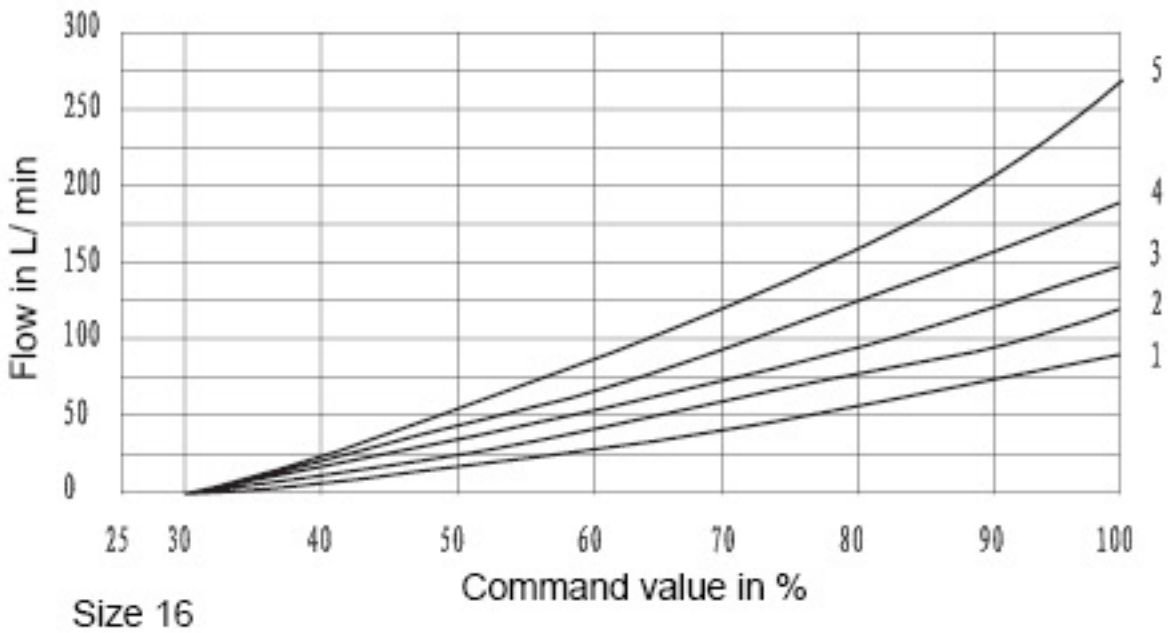

85L/min Nominal flow at 1MPa valve pressure difference
1 Pv = 1MPa constant
2 Pv = 2MPa constant
3 Pv = 3MPa constant
4 Pv = 5MPa constant
5 Pv = 10MPa constant

Size 16

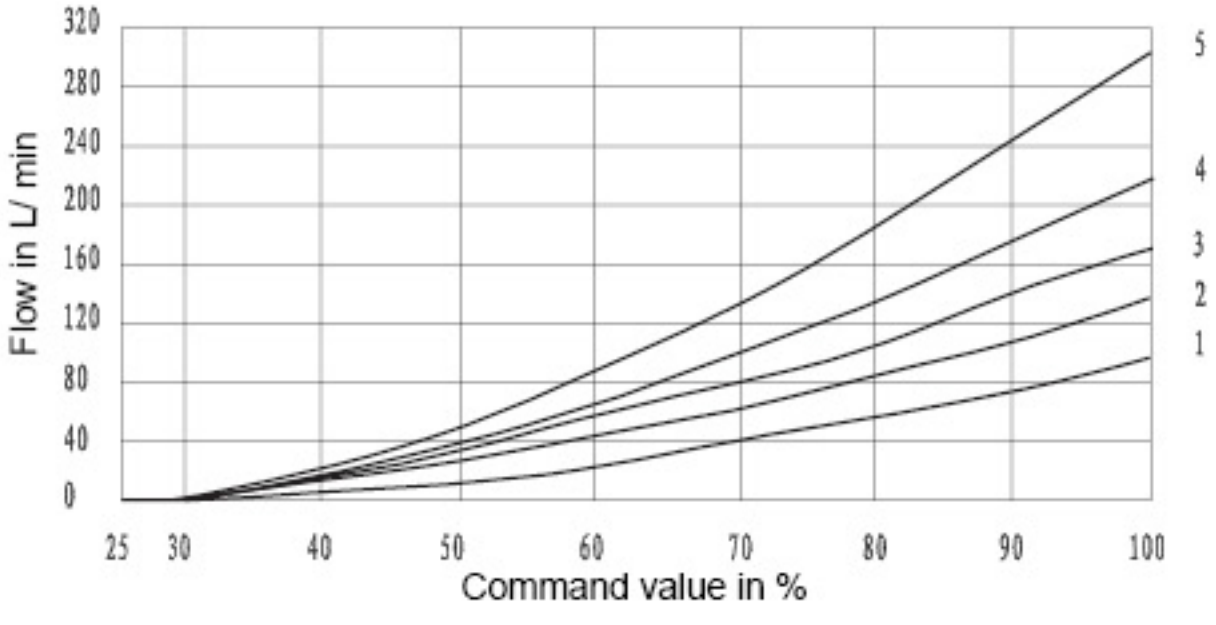

100L/min Nominal flow at 1MPa valve pressure difference
1 Pv = 1MPa constant
2 Pv = 2MPa constant
3 Pv = 3MPa constant
4 Pv = 5MPa constant
5 Pv = 10MPa constant

Please note power limit!

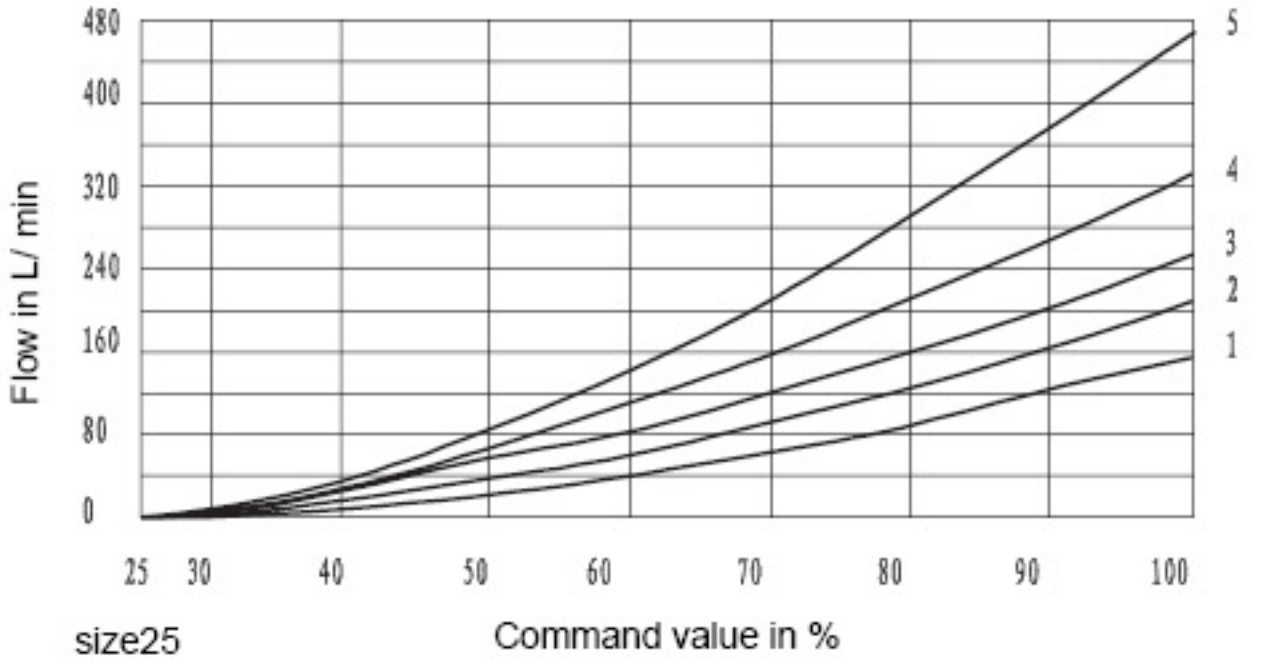

150L/min Nominal flow at 1MPa valve pressure difference

1 Pv = 1MPa constant
2 Pv = 2MPa constant
3 Pv = 3MPa constant
4 Pv = 5MPa constant
5 Pv = 10MPa constant

size25

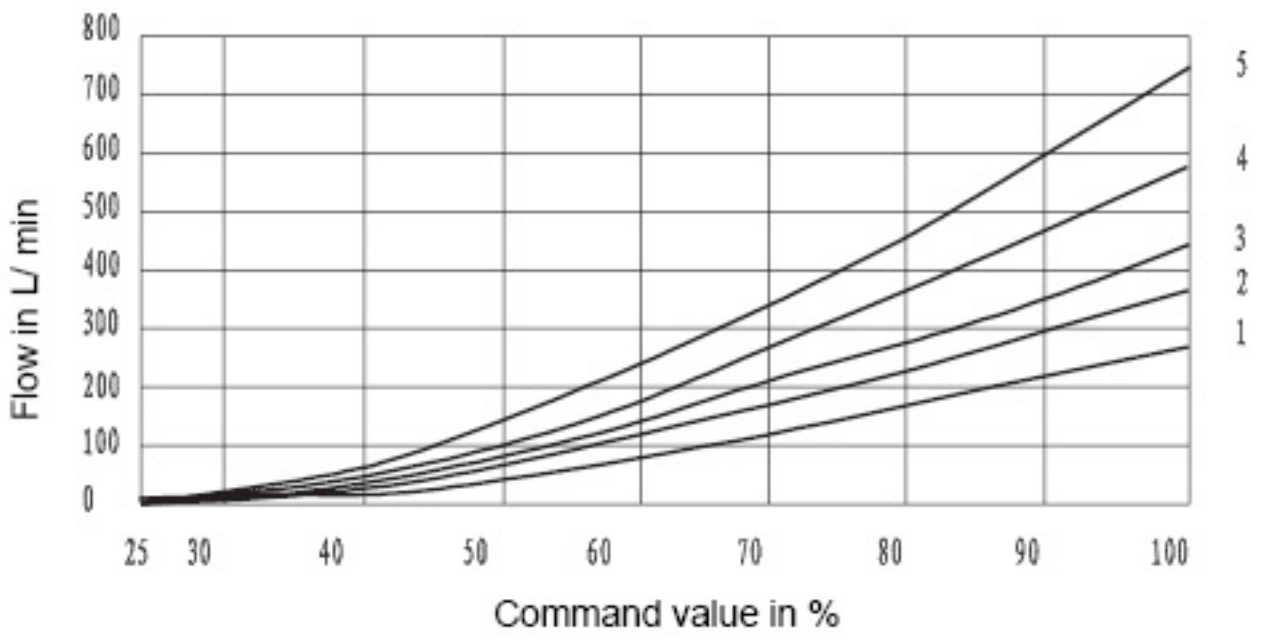

270L/min Nominal flow at 1MPa valve pressure difference

1 Pv = 1MPa constant
2 Pv = 2MPa constant
3 Pv = 3MPa constant
4 Pv = 5MPa constant
5 Pv = 10MPa constant

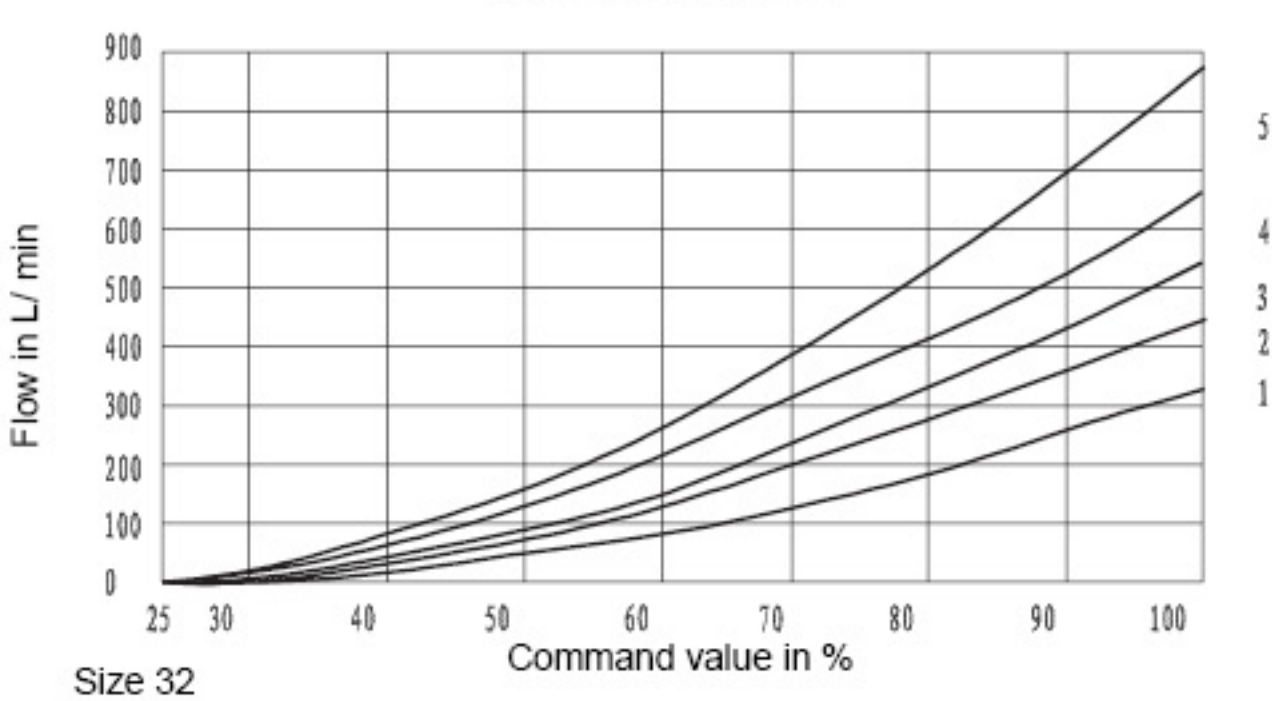

325L/min Nominal flow at 1MPa valve pressure difference

1 Pv = 1MPa constant
2 Pv = 2MPa constant
3 Pv = 3MPa constant
4 Pv = 5MPa constant
5 Pv = 10MPa constant

Size 32

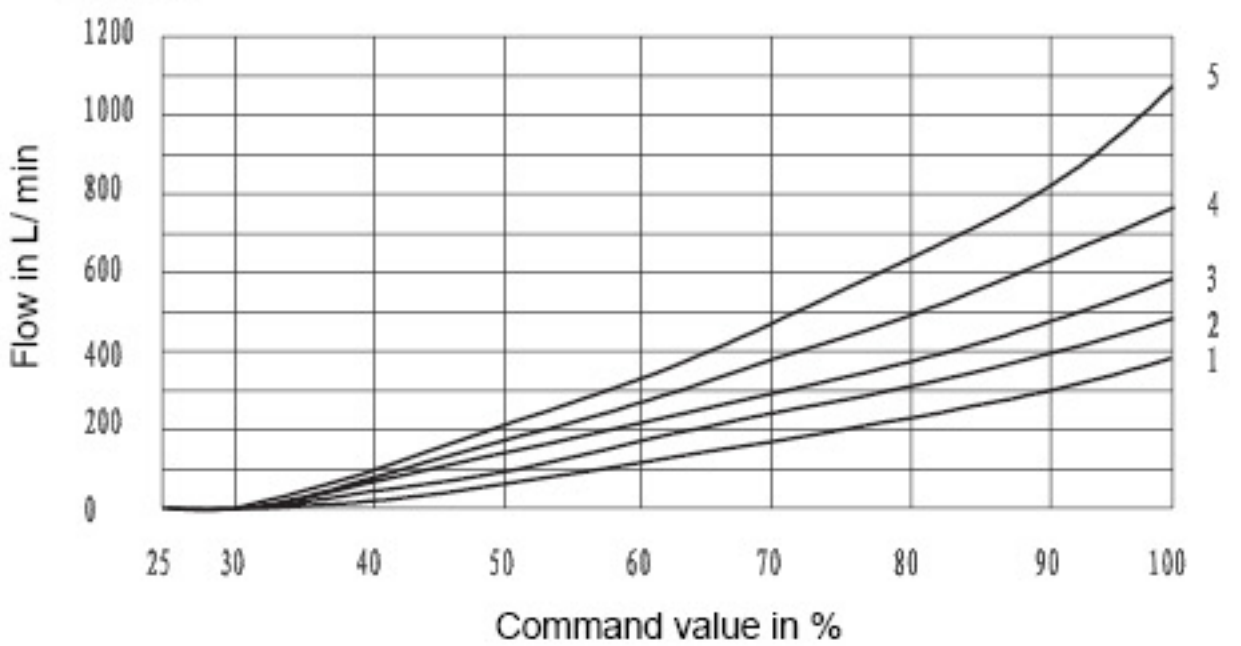

360L/min Nominal flow at 1MPa valve pressure difference

1 Pv = 1MPa constant
2 Pv = 2MPa constant
3 Pv = 3MPa constant
4 Pv = 5MPa constant
5 Pv = 10MPa constant

Pv=Pressure drop across valve (inlet pressure minus load pressure and return line pressure)

Characteristic curves:(measured at v=36 × $10^{-6}m^2/S$ t=50°C)

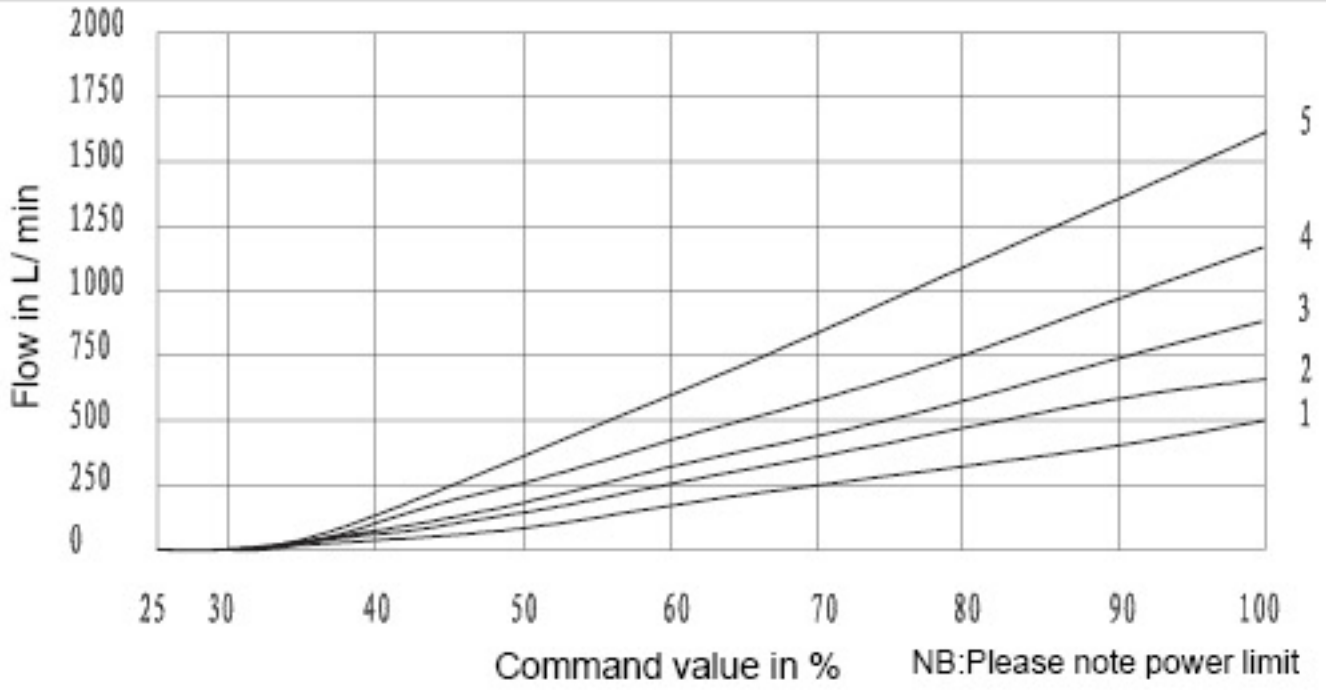

520L/min Nominal flow at 1MPa valve pressure difference

1 Pv = 1MPa constant
2 Pv = 2MPa constant
3 Pv = 3MPa constant
4 Pv = 5MPa constant
5 Pv = 10MPa constant

Pv = Pressure drop across valve (Input pressure minus load pressure and return pressure)

Unit Dimensions Type 4WRZ10

(Dimensions in mm)

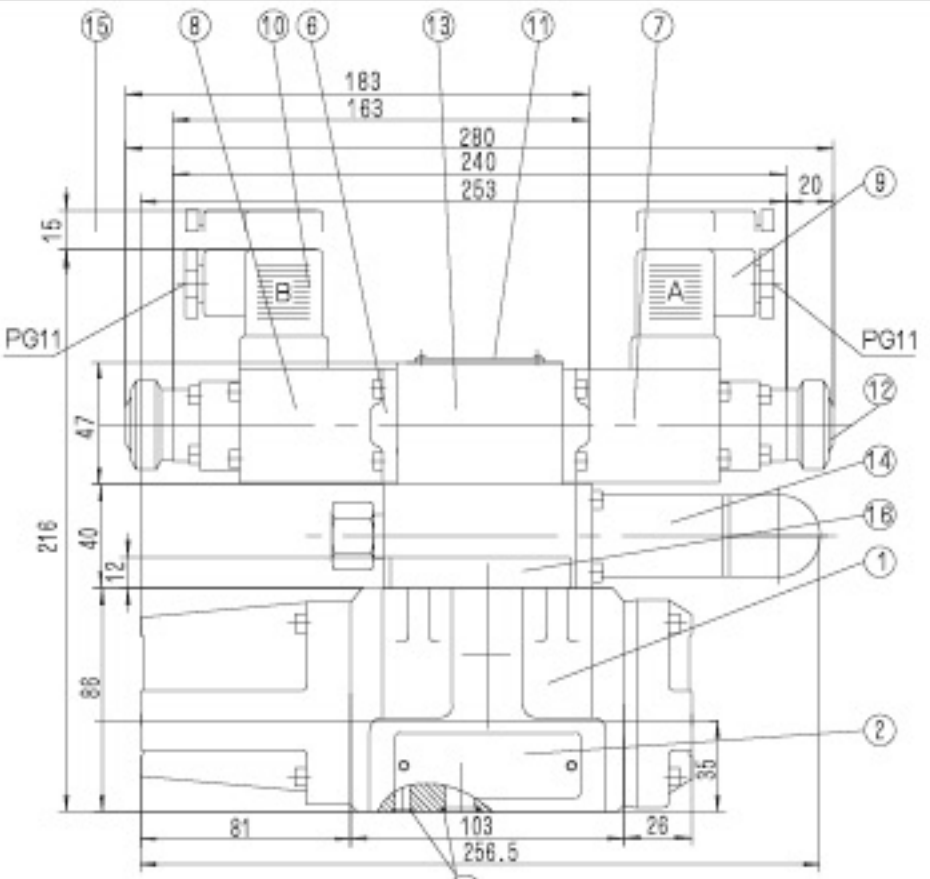

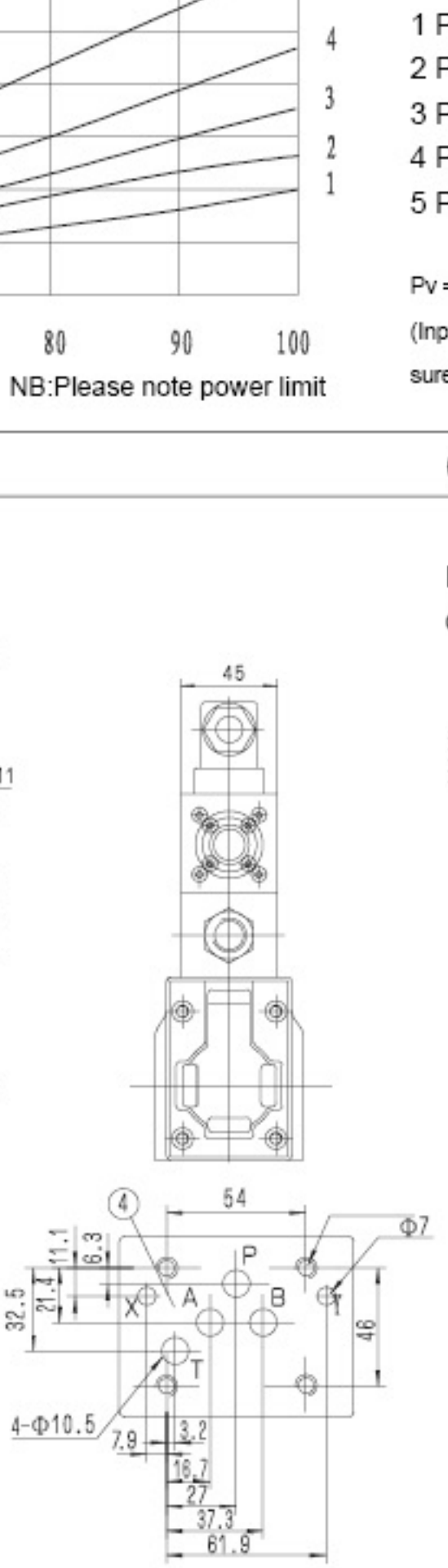

Required surface finish of mating piece

1 Main valve
2 Nameplate for main valve
3 Ports position of poilt valve
4 Machined mounting surface and position of ports
5 O-ring 12X2(Ports A,B,P,T) O-ring 10.82X1.78(Ports X,Y)
6 Pilot valve for 2-position valve (Type A and B)
7 Proportional solenoid "a"
8 Proportional solenoid "b"
9 Plug "A",coloured grey
10 Plug "B",coloured black
11 Nameplate of pilot valve
12 Emergency hand operator
13 Poilt valve for 3-position valve with two solenoids and plug Z4
14 Pressure reducing valve ZDR6DP2-30/75YM
15 Space required to remove plug
16 Connector plate(type WRH)

Subplates G534/01
G535/01
G536/01

see page 81and 82

Unit Dimensions Type 4WRZ16

(Dimensions in mm)

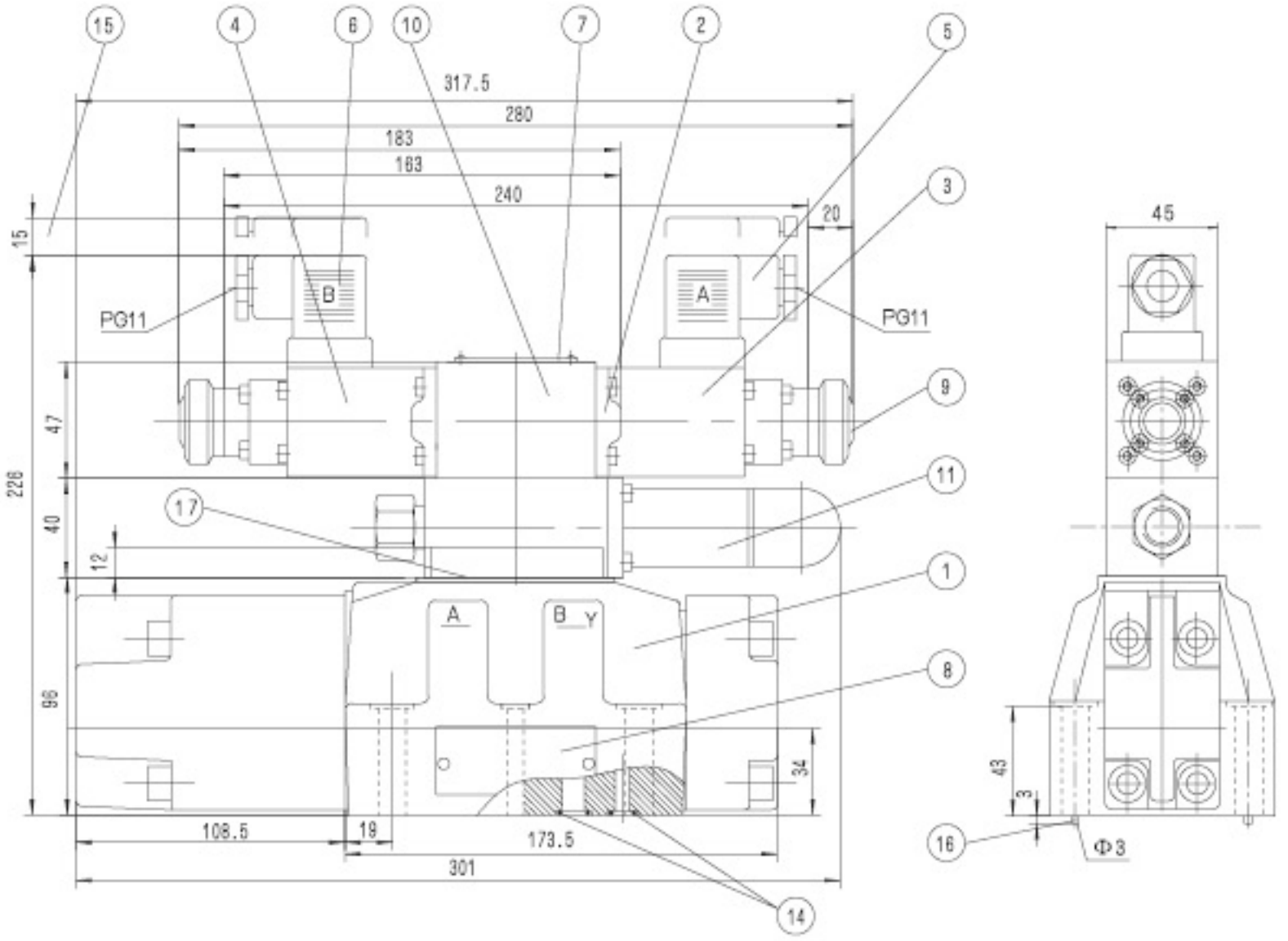

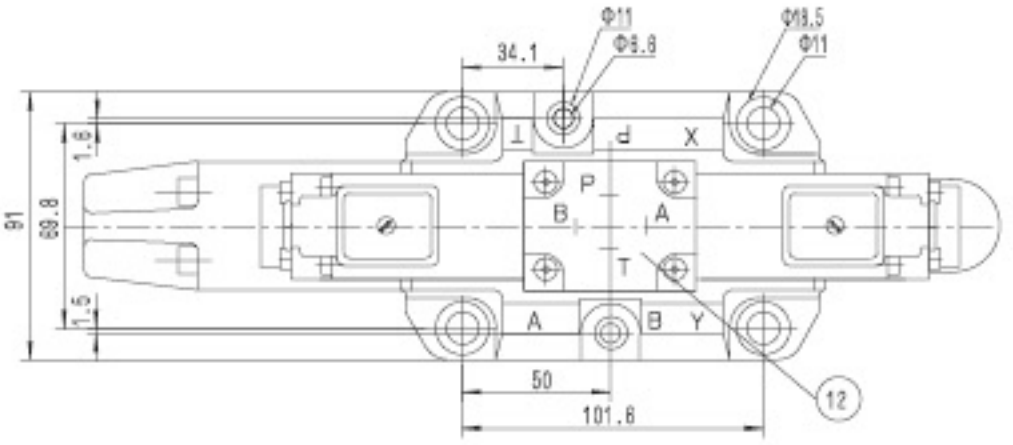

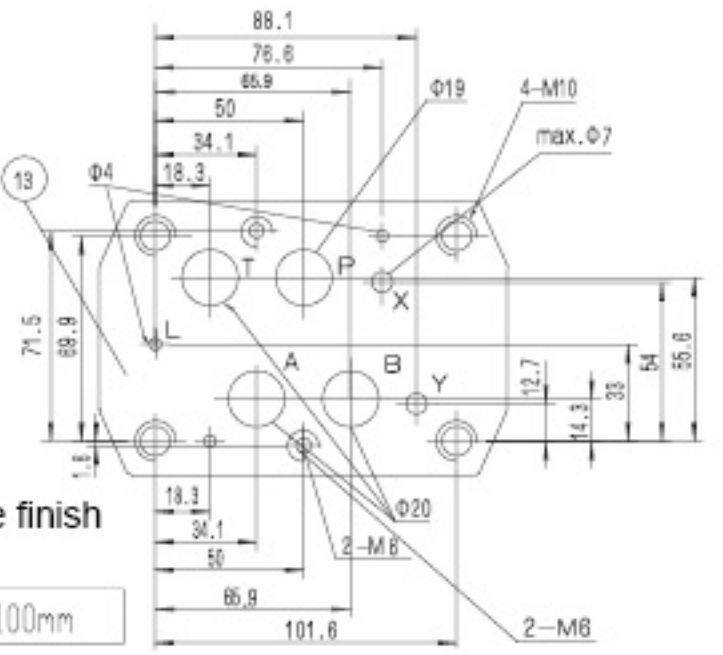

Required surface finish of mating piece

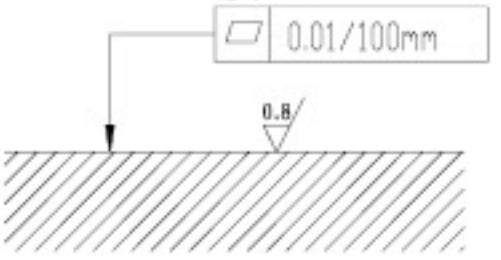

1 Main valve
2 Pilot valve for 2-position valve (models A and B),with one solenoid and plug Z4
3 Proportional solenoid a
4 Proportional solenoid b
5 Plug "A",coloured grey
6 Plug "B",coloured black
7 Nameplate for pilot valve
8 Nameplate for wain valve
9 Emergency hand operator
10 Pilot valve for 3-position with two solenoid and plug "Z4"
11 Pressure reducing valve ZDR6DP2-30B/75YM
12 Ports position of pilot valve
13 Machined mounting surface and position of ports
14 O-ring 22X2.5 (for Ports A,B,P,T)
O-ring 10X2 (for Ports X,Y)
15 Space required to remove plug
16 Locating pin
17 Connector plate(type WRH)

Subplates
G172/01
G172/01
G174/01
G174/02
G174/08

See page 82 and 83

Unit Dimensions Type 4WRZ25

(Dimensions in mm)

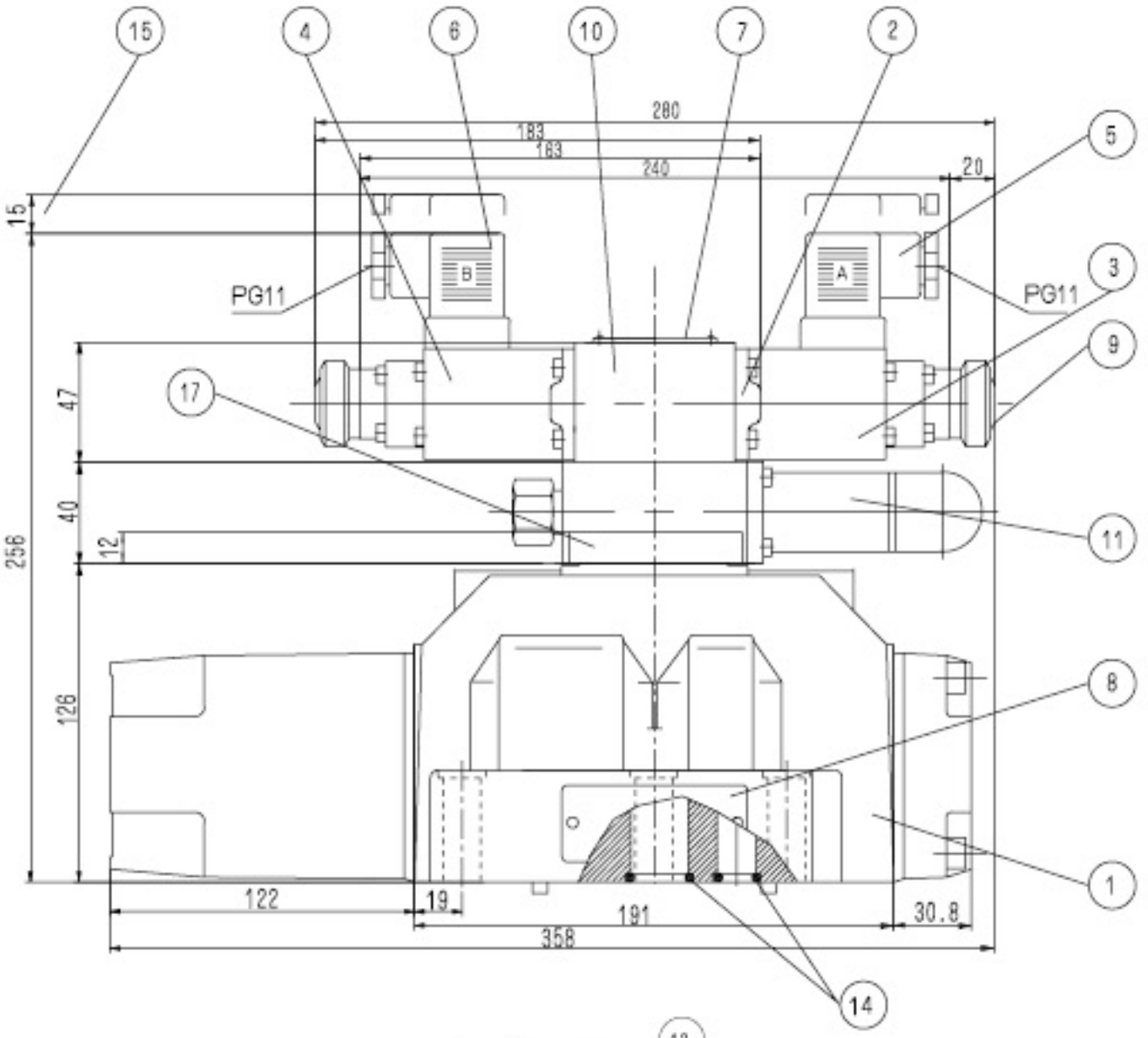

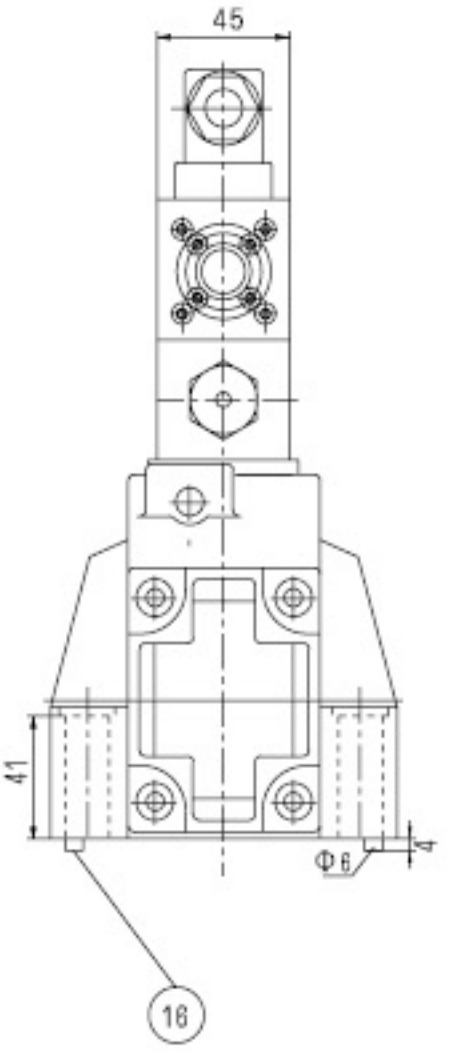

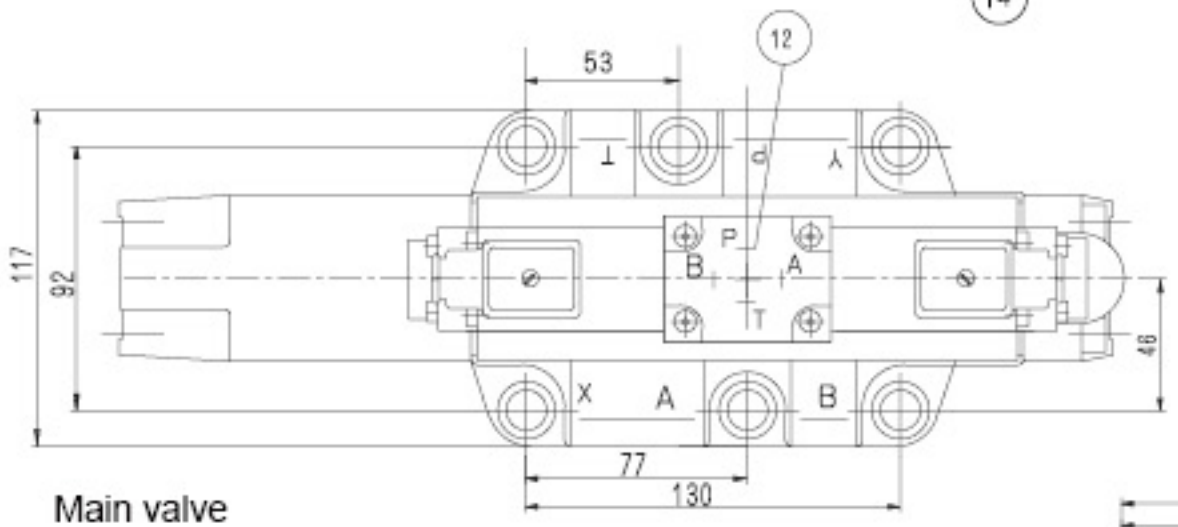

Required surface finish of mating piece

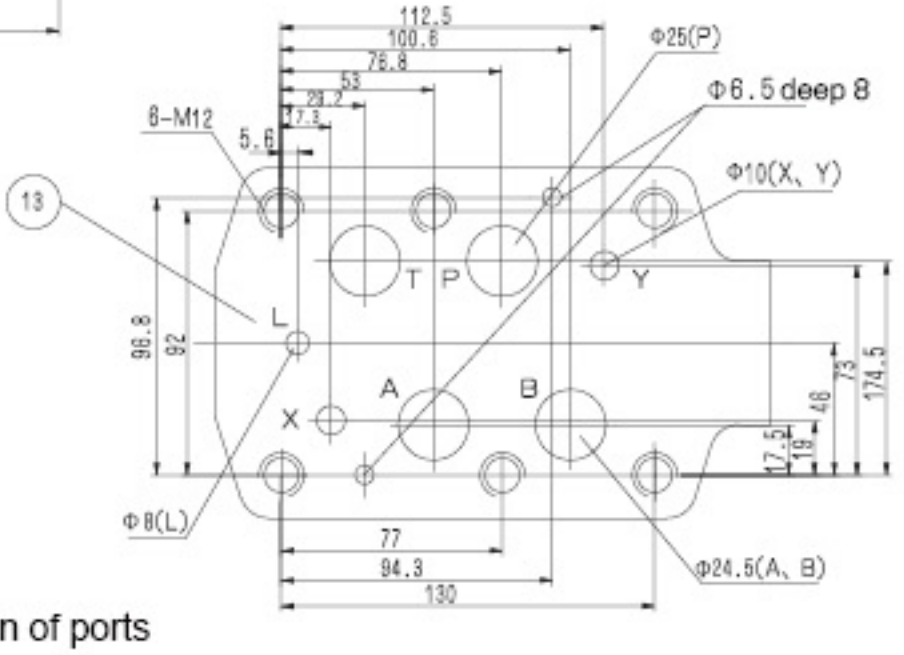

1 Main valve
2 Pilot valve for 2-position valve with one solenoid and plug "Z4" (models A and B)
3 Proportional solenoid "a"
4 Proportional solenoid "b"
5 Plug "A",coloured grey
6 Plug "B",coloured black
7 Nameplate for pilot valve
8 Nameplate for wain valve
9 Emergency hand operator
10 Pilot valve for 3-position valve with two solienoid and plug "Z4"
11 Pressure reducing valve ZDR6DP 2-30B/75YM
12 Ports Position of pilot valve
13 Machined mounting surface and position of ports
14 O-ring 27X3 (for Ports A,B,P,T)
O-ring 19X3 (for Ports X,Y)
15 Space required to remove plug
16 Locating pin
17 Connector plate(type WRH)

Subplates G151/01 G153/01
G154/01 G156/01
see page 84

Unit Dimensions Type 4WRZ32

(Dimensions in mm)

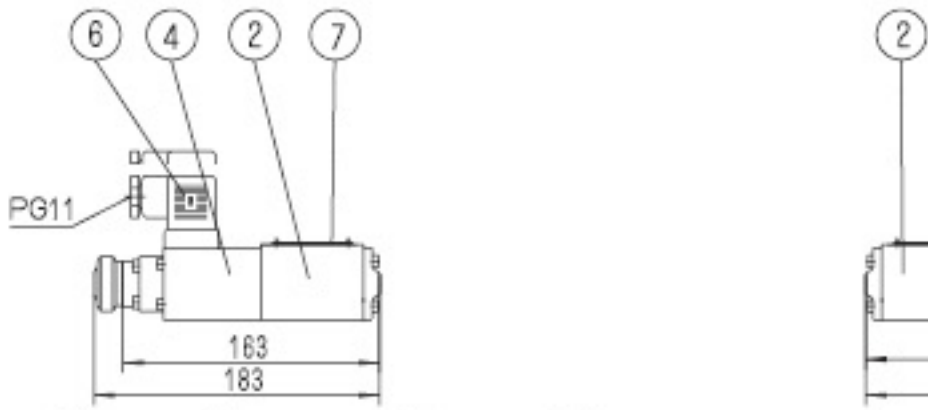

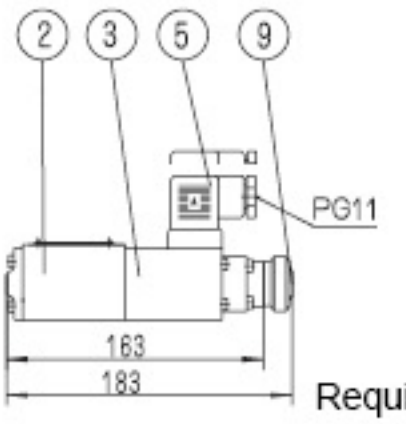

Required surface finish of mating piece

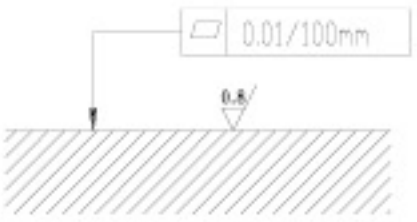

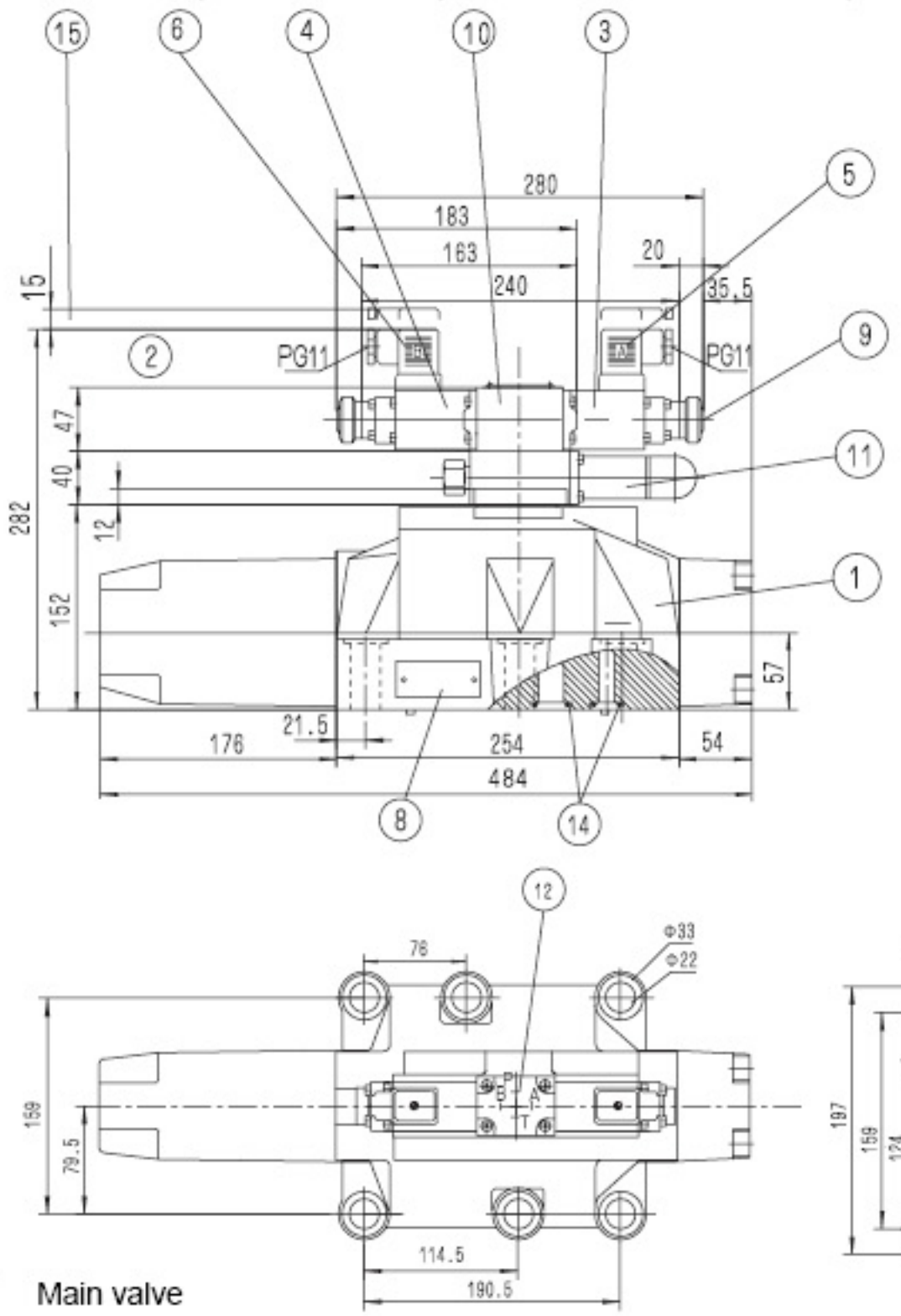

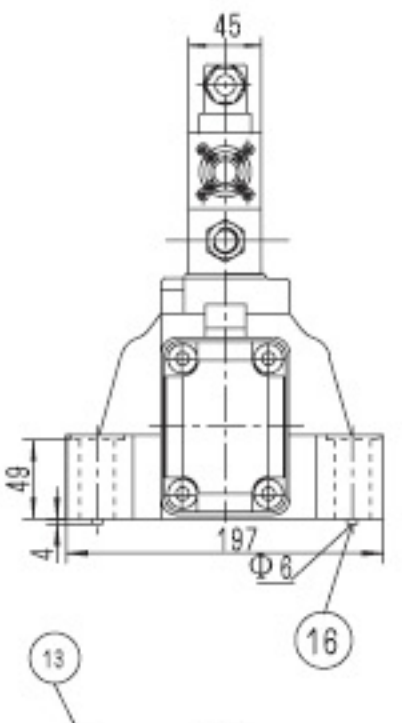

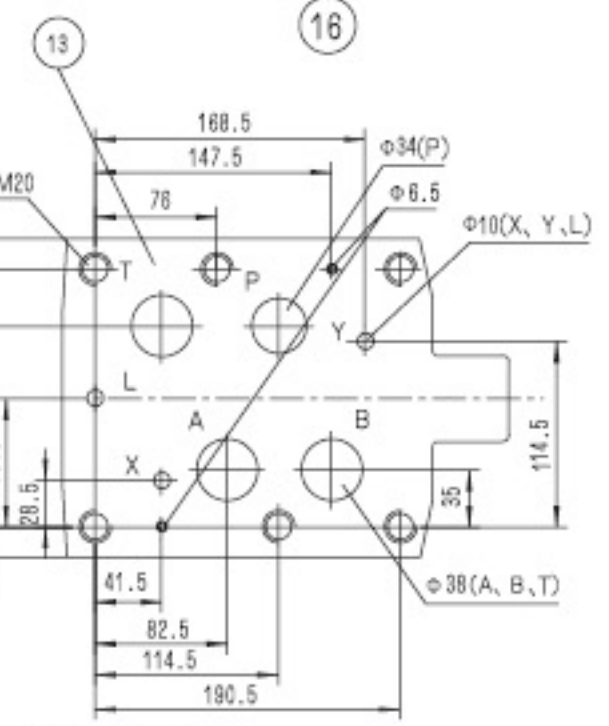

1 Main valve
2 Pilot valve for 2-position valve with one solenoid and plug "Z4" (models A and B)
3 Proportional solenoid "a"
4 Proportional solenoid "b"
5 Plug "A",coloured grey
6 Plug "B",coloured black
7 Nameplate for pilot valve
8 Nameplate for wain valve
9 Emergency hand operator
10 Pilot valve for 3-position valve with two solienoid and plug "Z4"
11 Pressure reducing valve ZDR6DP2-30B/75YM
12 Ports position of pilot valve
13 Maachined mounting surface and position of ports
14 O-ring 42X3(Ports A,B,P,T)
O-ring 19X3(Ports X,Y)
15 Space required to remove plug
16 Locating pin
17 Connector plate(type WRH)

Subplates
G157/01
G157/02
See page 85

Notice

1. **The fluid must be filtered. Minimum filter fineness is 20 μm.**
2. **The tank must be sealing up and an air filter must be installed on air entrance.**
3. **Products without subplate when leaving factory, if need them, please ordering specially.**
4. **Valve fixing screws must be high intensity level (class 10.9). Please select and use them according to the parameter listed in the sample book.**
5. **Roughness of surface linked with the valve is required to**

.
6. **Surface finish of mating piece is required to 0.01/100mm.**